ImageQuest

L80A

Multiscanning Color Monitor

TECHNICAL SERVICE MANUAL

HYUNDAI

www.telemaster.ru

Safety Precaution

WARNING
Service should not be attempted by anyone unfamiliar with the necessary precautions on this monitor. The followings are the necessary precautions to be observed before servicing.

1. When managing this monitor , cover with shield plate to avoid to scrach on LCD surface.
2. When replacing a chassis in the cabinet, always be certain that all the protective devices are put back in place, such as nonmetallic control knobs, insulating covers, shields, isolation resistor capacitor network etc.
3. Before returning the monitor to the customer, always perform an AC leakage current check on the exposed metallic parts of the cabinet, such as signal connectors, terminals, screw heads, metal overlays, control shafts etc, to be sure the monitor is safe to operate without danger of electrical shock.

General Information

1. Description

This 18.1" LCD color display monitor is operated in R, G, B drive mode input.

2. Operating instructions

2-1. Front

Power Switch , Menu, Select, Down, Up, DPMS (Power) LED

2-2. Rear

Input connector (AC & Signal Cable & DVI Cable & Video Cable & USB Cable)

2-3. OSD Controls

H / V Position, Clock (H-Size),Clock Phase, Brightness, Contrast, Recall,Color Control, Preset mode, Language, OSD Adjust , Auto Adjust

3. Electrical Characteristic

3-1. Power Supply
AC / DC - Input Voltage : 90V~264V
Input Current : 1A (Max)
Input Ferquency : 50 ~ 60Hz
- Output Voltage 12V / 5V / 10V
Output Current 2.5A / 3A / 1A

3-2. Video Input Signal

Level : 0.7 Vp-p analog signal(at 75 ohm termination to ground)
Polarity : Positive

3-3. Horizontal Synchronization Signal

Level : TTL High : 2.4V min
Low : 0.4V max
Polarity : - or +
Frequency : 31kHz ~ 80kHz

3-4. Vertical Synchronization Signal

Level : TTL High : 2.4V min
Low : 0.4V max
Polarity : - or +
Frequency : 56Hz ~ 87Hz

Control Description

Front View

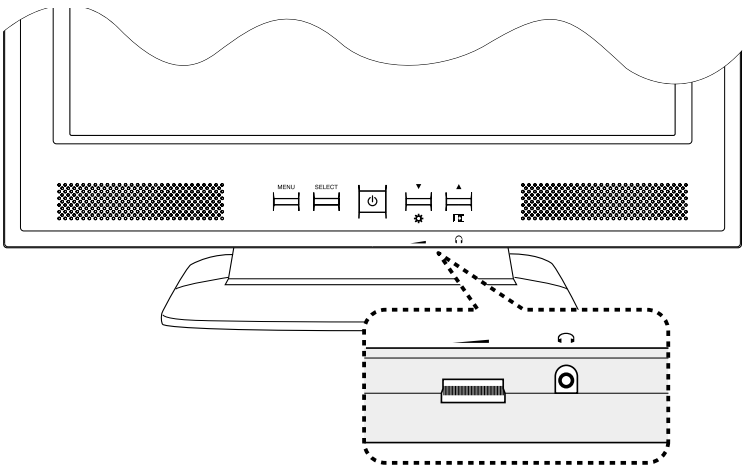

Support Modes

NO	Resolution	H Frequency (kHz)	V Frequency (Hz)	H Polarity	V Polarity	Pixe Clock
1	640 x 400	31.32	70.0	0	0	25.056
2	720 x 400	31.5	70.1	0	1	28.322
3	720 x 400	37.9	85.0	0	1	35.500
4	640 x 480	31.5	59.9	0	0	25.175
5	640 x 480	37.5	75.0	0	0	31.500
6	640 x 480	43.3	85.0	0	0	36.000
7	800 x 600	35.2	56.3	1	1	36.000
8	800 x 600	37.9	60.3	1	1	40.000
9	800 x 600	48.1	72.2	1	1	50.000
10	800 x 600	46.9	75.0	1	1	49.500
11	800 x 600	53.7	85.1	1	1	56.250
12	832 x 624	49.7	74.5	0	0	57.283
13	1024 x 768 (i)	35.5	86.9	1	1	44.900
14	1024 x 768	48.4	60.0	0	0	65.000
15	1024 x 768	56.5	70.1	0	0	75.000
16	1024 x 768	60.0	75.0	1	1	78.750
17	1024 x 768	68.7	85.0	1	1	94.500
18	1152 X 870	68.6	75.0	1	1	100.000
19	1280 X 1024	63.9	60.0	1	1	108.000
20	1280 X 1024	79.9	75.0	1	1	135.000

(i) : Interlace Mode Timing

Video Input Signal

Recommended signal are shown below

- **Video Signal**
  Video level : 0 to 700mV
  Polarity : positive
  Video Input : RGB separated
  Analog level
  Sync input : H-Sync(TTL level)
  V-Sync (TTL level)
- **Waveform**
  Video input(R.G.B)

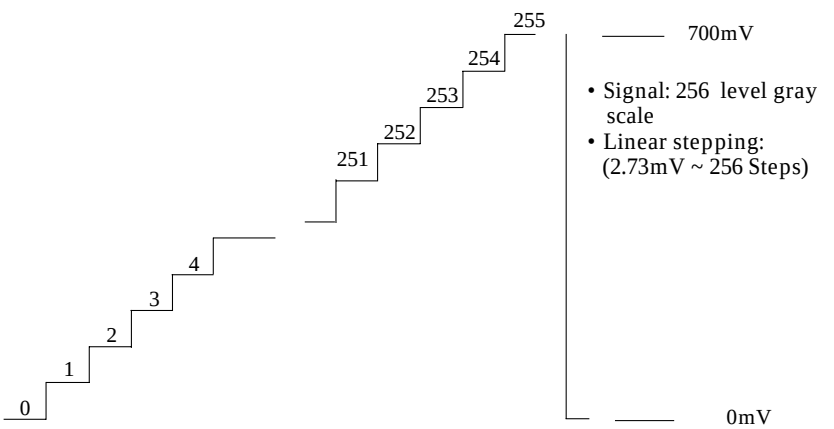

• H-Sync

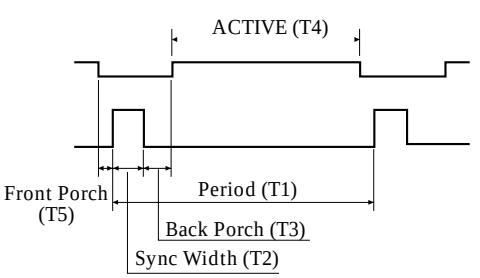

• V-Sync

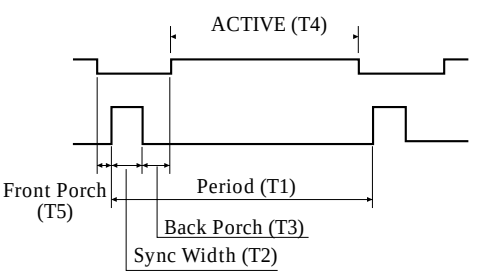

Video Input Terminal

1. Analog

A 15 Pin D-sub connector is used as the input signal connector
Pin and input signals are shown in the table below.

Pin Description

SIGNAL / PIN NO.	SEPARATE SYNC / DDC 1/2B
1	RED
2	GREEN
3	BLUE
4	GND
5	RETURN
6	RED GROUND
7	GREEN GROUND
8	BLUE GROUND
9	N.C
10	LOGIC GROUND
11	GROUND
12	SDA
13	H-SYNC(TTL)
14	V-SYNC(VCLK)
15	SCL

D-Sub miniature connector

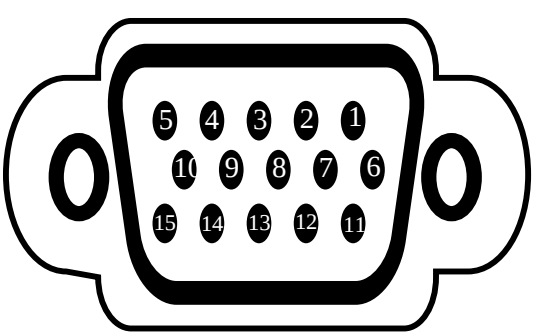

2. Digital

24 Pin DVI-D Interface connector is used as the input signal connector Pin and input signal are shown in the table below.

Pin Description

PIN NO.	SEPARATE SYNC / DDC 1/2B	PIN NO.	SEPARATE SYNC / DDC 1/2B
1	T.MD.S Data 2-	13	T.MD.S Data 3+
2	T.MD.S Data 2+	14	+5V Power
3	T.MD.S Data2/4 Shield	15	Ground(for +5V)
4	T.MD.S Data 4-	16	Hot Plug Detect
5	T.MD.S Data 4+	17	T.M.D.S Data 0-
6	DDC Clock	18	T.M.D.S Data 0+
7	DDC Data	19	T.M.D.S Data 0/5 Shield
8	No Connect	20	T.M.D.S Data 5-
9	T.MD.S Data1-	21	T.M.D.S Data 5+
10	T.MD.S Data1+	22	T.M.S.D Clock Shield
11	T.MD.S Data 1/3 Shield	23	T.M.D.S Clock +
12	T.MD.S Data 3-	24	T.M.D.S Clock -

Digital-Only Receptacle Connector

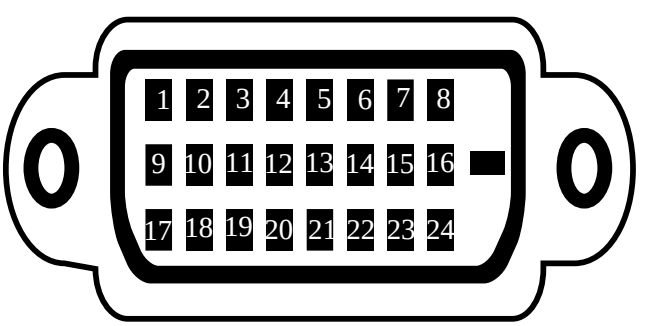

Connecting with External Equipment

Cautions
Be sure to turn off the power of your computer before connecting the monitor.

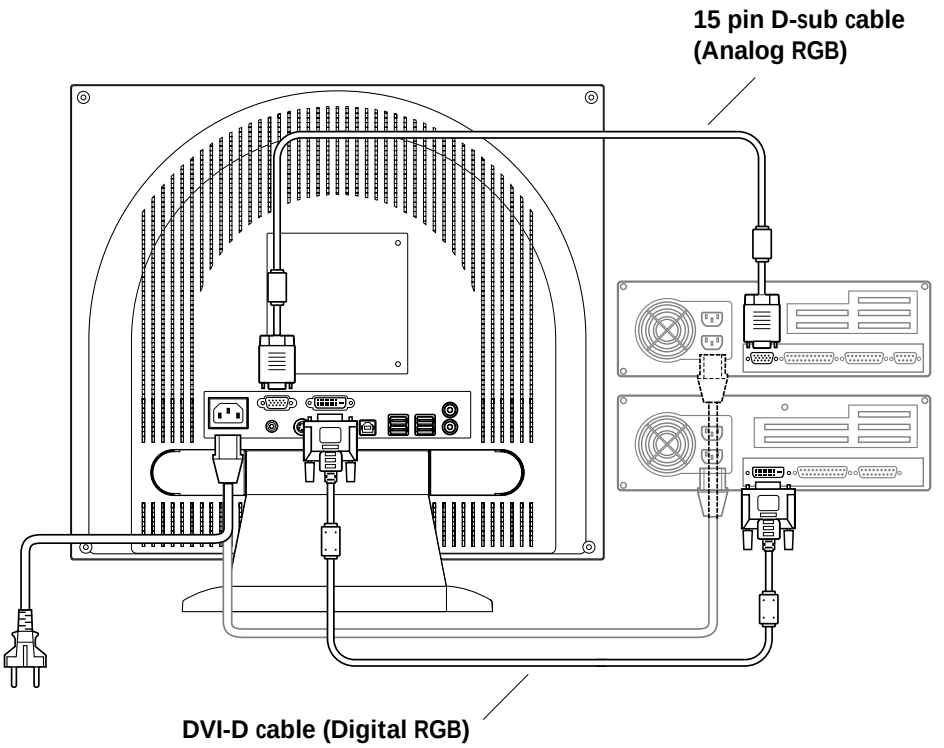

Theory of Operation

1. DC/AC INVERTER

Input voltage : DC 12V
Input current : 2.0A(Max)
Output current : 6m Arms(TYP)
Frequency(switching) : 50KHz
Output power : 19.2W(TYP)
On / off control voltage : 5.0V

2. DPMS MODE

Reference to DPMS files

Status	Signal			Power Consumption	Recovery Time	LED Indicator
	H-Sync	V-Sync	Video			
on	Pulse	Pulse	Active	60W	-	Green
Suspend	Pulse	No Pulse	Blank	Less Than 10W	Within3 Sec	Green / Orange(about 0.5 sec)
off	No Pulse	No Pulse	Blank	Less Than 5W	Within 3 Sec	Orange

On Screen Controls & LED Indicator

The menu for screen setting adjustment is located in the OSD and can be viewed in one of five languages
OSD feature andmain funcrions are as follows:

The OSD adjustments available to you are listed below.

BRIGHTNESS
Adjust the brightness of the screen.

CONTRAST
Adjust the contrast of the screen.

H-POSITION
Adjust the horizontal position of the entire screen image.

V-POSITION
Adjust the vertical position of the entire screen image.

CLOCK (WIDTH)
Adjust the horizontal size of the entire screen image.

CLOCK-PHASE
Adjust the noise of the screen image.

AUTO ADJUST
Adjust the shape of screen atomatically.

COLOR CONTROL

Color temperature affects the tint of the image. With lower color temperatures the image turns reddish and with higher temperatures bluish.

There are three color settings available: Mode 1(a cool white), Mode 2(a warm white) or USER. With the USER setting you can set individual values for red, green and blue.

INFORMATION

INFORMATION

Information shows the horizontal and vertical frequency of your display unit. The Information menu lists modes which are preset at the factory and modes which have been defined by user. It also shows you the mode your display unit is currently operating in. You can set the display mode (frequency and refresh rate) in Windows.

LANGUAGE

You can select the language in which adjustment menus are displayed. The following languages are available: English, French, German, Italian, Spanish, Swedish, Finnish, Danish, Portuguese and Japanese or Korean.

OSD ADJUST

You can adjusts the OSD menu's horizontal or vertical position on the screen. You can also adjust display time of the OSD menu from 5 to 50 seconds.

SCALING MODE

This menu is used to choose the desired image size(Input video scaling). There are three video scaling modes available :

- One to One : Select this item to view the same size as the input signal.
- Full Screen : Select this item to view the extended screen to the full size horizontally and vertically.
- Aspectratio : Select this item to view the extended screen by width to the full size with the vertical screen extended by the ratio of the input signal.

SOURCE SELECT

This menu is used to choose the desired input signal source.
There are four signal sources available :

- **Analog RGB : 15 pin D-sub, Analog signal**
- **Digital RGB : 24 pin DVI-D, Digital signal**
- **S-Video : MINI DIN, Separate video signal**
- **Composite-Video : RCA Jack, Composite video signal**

TEST PATTERN

Displays internal test pattern.

! **The Clock Phase may not be optimized when the input timing is not comply with VESA standard timing. In order to get the optimized result of Auto Adjust Function, it is recommended to display bright color image on the entire screen before proceeding Auto Adjust Function.**

Getting Fine Picture

Step 1. At first Display, a full screen, such as, Window's background or "H" character should be achieved by using Editor (ex: Notepad. exe)

Step 2. Adjust the screen to the center of the Display(LCD), by using the top and bottom display controls. (i.e.Using V-Position Adjust menu)

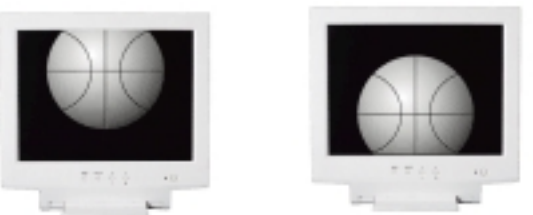

Step 3. Adjust the screen to the center of the Display(LCD), by using the right and left display controls. (i.e.Using Clock and H-Position adjust menu)

Step 4. Adjust the Clock-phase until the "H" Character displays clear.

Step 5. Using the Contrast. Brightness, and Color Control menu, set the color to your preference.
Step 6. When you finish the adjustment, you can save your settings by pressing on the menu until the OSD screen has disappeared.

Factory Setting & EEPROM Initialization Method

Factory Setting Method

- Connect the signal cable and power cable to the LCD monitor.
- Press Power switch with pressed MENU key.(Menu key + Power key).
- Then, a User can change the factory setting value in OSD menu.
- Save changed value and Turn off the power s / w.
- Turn on the power, adjust the screen.

Specification

LCD Module	SIZE	18.1” Viewable diagonal
	Dot Pitch	0.2805mm
	Contrast Ratio	300 : 1(TYP)
	Brightness	200 cd / m^2 (TYP)
	Response Time	27ms (TYP.)
Input	Signal	Analog R.G.B Signal / TMDS Signal
	Connector	15 pin D-SUB Connector / Digital 24Pin DVI
SYNC	H-Freq	31.0 kHz~80 kHz
	V-Freq	56Hz ~ 87 Hz
Display	Area	359.04(H)X287.232(V)mm
	Color	16.777M
Recommand Resolution		1280X1024 @ 60Hz
Video Bandwidth		54MHz (Max)
User Control & OSD Control		Contrast,Brightness,H-V Position, Clock, Clock Control Color Control, Information, Language, OSD Adjust(Position, Display Time), Auto Adjust, Test, Pattern, Source, Select, Scaling Mode
Power Management		VESA DPMS Standard
Plug & Play		VESA DDC 1/2B
Safety & Regulation	EMC	FCC CLASS B , CE , VCCI
	Safety	cULus, CE, TUV-GS, SEMKO, DEMKO, FIMKO, NEMKO
	Ergomomi	TCO’99
Temperature	Operating	5 to 35 °C
	Storage	- 5 to 45 °C
Humidity	Operating	30 to 80%(Non-condensing)
	Storage	5 to 90%(Non-condensing)
Weight	unpacked	8.1Kg
	packed	10.5Kg
Dimension(LXWXH mm)		202X440X435mm

* Specification is subject to change without notice for performance improvement.

Critical Parts Specification

1. LCD Module

HT18E22-200 is a A-Si TFT active matrix color liquid crystal comprising amorphous silicon TFT attached to each signal electrode, a driving circuit and a backlight.
a built-in backlight display area contains 1280X1024 pixels and can display
full color (16.7M colors)

Display area	359.04(H)X287.232(V)mm
Drive system	A-Si TFT
Display color	16.7M Colors
Number of Pixel	1280X1024
Pixel arrangement	RGB vertical strip
Pixel pitch	0.2805(H)X0.2805(V)mm
Weight	2.6Kg
Contrast ratio	300:1
Viewing angle	
Horizontal:	80 degree , 80 degree
Vertical:	80 degree , 80 degree
Response time	27ms(max)
Luminance	200 cd / m^2(TYP)
Signal system	Digital RGB signals, Sync signals(H, V-Sync), Dot clock(DCLK) , DE(Data Enable)
Supply voltage	3.3V / 12V (Typ)
Backlight	Edge light type: Four colt cathode fluorescent lamps With in- verter
Power consumption	4.45W(TYP) without B / L

AD9884A

FEATURES
140 MSPS Maximum Conversion Rate
500 MHz Analog Bandwidth
0.5 V to 1.0 V Analog Input Range
400 ps p-p PLL Clock Jitter
Power-Down Mode
3.3 V Power Supply
2.5 V to 3.3 V Three-State CMOS Outputs
Demultiplexed Output Ports
Data Clock Output Provided
Low Power: 570 mW Typical
Internal PLL Generates CLOCK from HSYNC
Serial Port Interface
Fully Programmable
Supports Alternate Pixel Sampling for Higher-Resolution Applications

APPLICATIONS
RGB Graphics Processing
LCD Monitors and Projectors
Plasma Display Panels
Scan Converters

FUNCTIONAL BLOCK DIAGRAM

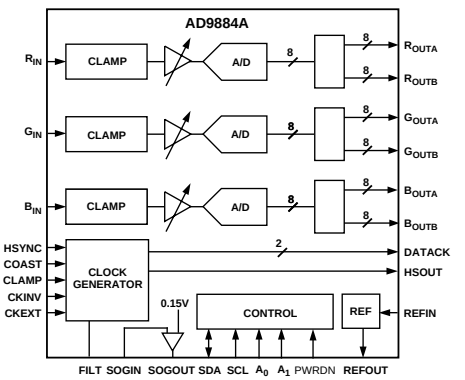

GENERAL DESCRIPTION

The AD9884A is a complete 8-bit 140 MSPS monolithic analog interface optimized for capturing RGB graphics signals from personal computers and workstations. Its 140 MSPS encode rate capability and full-power analog bandwidth of 500 MHz supports display resolutions of up to 1280× 1024 (SXGA) at 75 Hz with sufficient input bandwidth to accurately acquire and digitize each pixel.

To minimize system cost and power dissipation, the AD9884A includes an internal +1.25 V reference, PLL to generate a pixel clock from HSYNC, and programmable gain, offset and clamp circuits. The user provides only a +3.3 V power supply, analog input, and HSYNC signals. Three-state CMOS outputs may be powered by a supply between 2.5 V and 3.3 V.

The AD9884A's on-chip PLL generates a pixel clock from the HSYNC input. Pixel clock output frequencies range from 20 MHz to 140 MHz. PLL clock jitter is typically 400 ps p-p relative to the input reference. When the COAST signal is presented, the PLL maintains its output frequency in the absence of HSYNC. A 32-step sampling phase adjustment is provided. Data, HSYNC and Data Clock output phase relationships are always maintained. The PLL can be disabled and an external clock input provided as the pixel clock.

A clamp signal is generated internally or may be provided by the user through the CLAMP input pin. This device is fully programmable via a two-wire serial port.

Fabricated in an advanced CMOS process, the AD9884A is provided in a space-saving 128-lead MQFP surface mount plastic package and is specified over a 0°C to +70 °C temperature range.

PIN CONFIGURATION

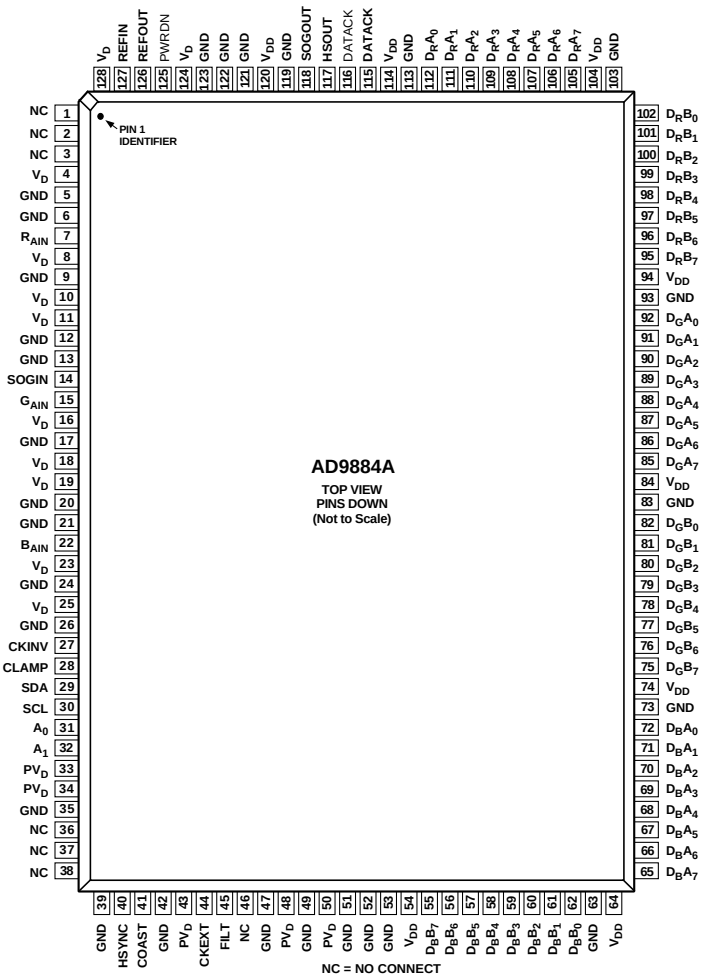

KS0127B

MULTISTANDARD VIDEO DECODER/SCALER

The KS0127B converts analog NTSC, PAL or SECAM video in composite, S-video, or component format to digitized component video. Output data can be selected for CCIR 601 or square pixel sample rates in either YCbCr or RGB formats. The digital video can be scaled down in both the horizontal and vertical directions. The KS0127B also decodes Intercast, Teletext, Closed Caption, and WSS data with a built-in bit data slicer. Digitized CVBS data can be output directly during VBI for external processing.

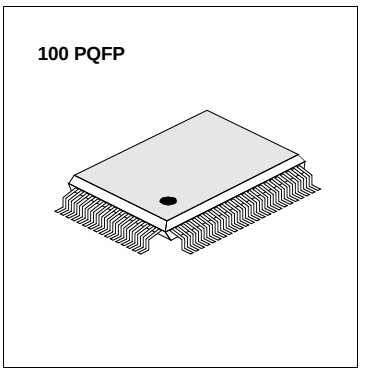

FEATURES

- **Accepts NTSC-M/N/4.43, PAL-M/N/B/G/H/I/D/K/L and SECAM formats with auto detection**
- **6 analog inputs: 3 S-video, 6 composite, or 1 3-wire YCbCr component video**
- **2-line luma and chroma comb filters including adaptive luma comb for NTSC**
- **Programmable luma bandwidth, contrast, brightness, and edge enhancement**
- **Programmable chroma bandwidth, hue, and saturation**
- **High quality horizontal and vertical down scaler**
- **Intercast, Teletext and Closed Caption decoding with built-in bit slicer**
- **Direct output of digitized CVBS during VBI for Intercast application**
- **Analog square pixel or CCIR 601 sample rates**
- **Output in 4:4:4, 4:2:2, or 4:1:1 YCbCr component, or 24-bit or 16-bit RGB formats with dithering**
- **YCbCr 4:2:2 output can be 8 or 16 bits wide with embedded timing reference code support for 8-bit mode**
- **Simultaneous scaled and non-scaled digital output ports outputs for 8-bit mode.**
- **Direct access to scaler via bi-directional digital port.**
- **Programmable Gamma correction table**
- **Programmable timing signals**
- **Industry standard IIC interface**

ORDERING INFORMATION

Device	Package	Temperature Range
KS0127B	100 PQFP	-20°~+70°C

APPLICATIONS

- **Multimedia**
- **Digital Video**
- **Video Capture/Editing**

RELATED PRODUCTS

- **KS0119Q2 NTSC VIDEO ENCODER**
- **KS0123 MULTISTANDARD VIDEO ENCODER**
- **KS0125 MULTISTANDARD VIDEO ENCODER**
- **KS0122 MULTISTANDARD VIDEO DECODER**
- **KS0127 MULTISTANDARD VIDEO DECODER**

PIN ASSIGNMENT - 100 PQFP

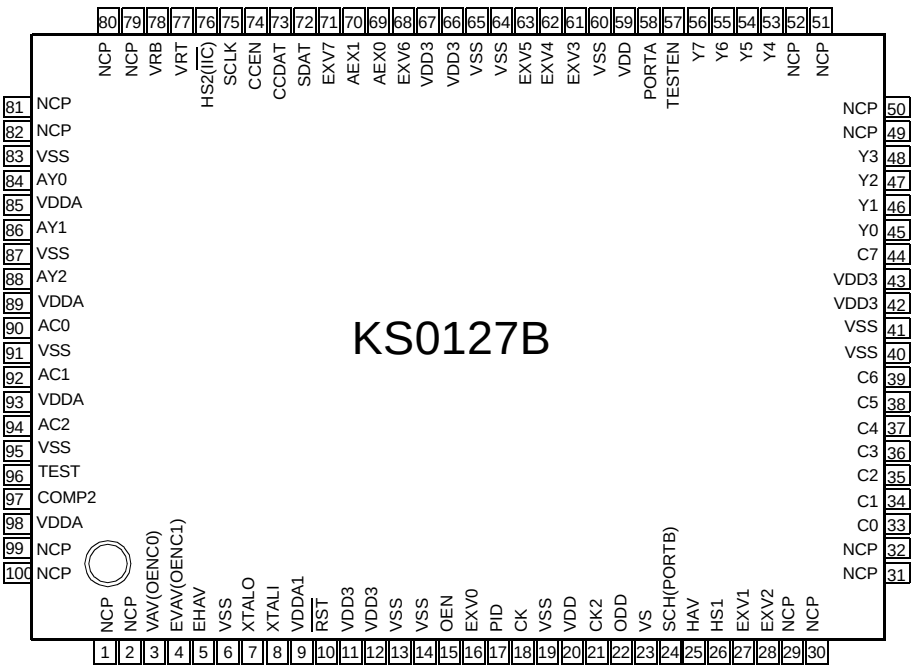

MF28F400B1

FEATURES

- Seven erase blocks:
  - 16KB/8K-word boot block (protected)
  - Two 8KB/4K-word parameter blocks
  - Four main memory blocks
- SmartVoltage Technology (SVT):
  - 3.3V ±0.3V or 5V ±10% V_{CC}
  - 5V ±10% or 12V ±5% V_{PP}
- Address access times:
  - 60ns, 80ns at 5V V_{CC}
  - 90ns, 110ns at 3.3V V_{CC}
- Selectable organizations:
  - 262,144 x 16 or
  - 524,288 x 8
- Industry-standard pinouts
- Inputs and outputs are fully TTL-compatible
- Automated write and erase algorithm
- Two-cycle WRITE/ERASE sequence
- Byte- or word-wide READ and WRITE
- TSOP packaging option

OPTIONS — MARKING

- Timing (5V V_{CC}/3.3V V_{CC})
  - 60ns/90ns access — -6
  - 80ns/110ns access — -8
- Boot Block Starting Address
  - Top (3FFFFH) — T
  - Bottom (00000H) — B
- Packages
  - Plastic SOP (600 mil) — SG
  - Plastic 48-lead TSOP Type 1 (12mm x 20mm) — WG
- Part Number Example: MT28F400B1SG-8 T

PIN ASSIGNMENT (Top View)

44-Pin SOP
(FA-1)

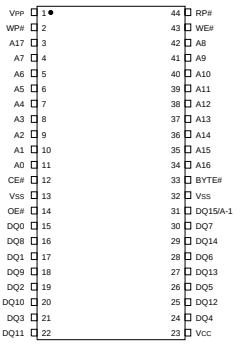

48-Pin TSOP Type I
(FB-2)

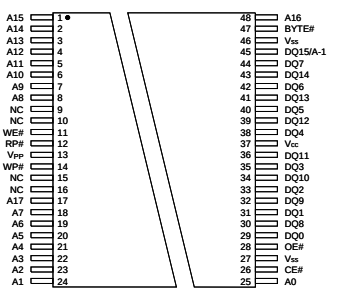

GENERAL DESCRIPTION

The MT28F400B1 is a nonvolatile, electrically block-erasable (Flash), programmable read-only memory containing 4,194,304 bits organized as 262,144 words by 16 bits or 524,288 words by 8 bits. SmartVoltage Technology (SVT) provides industry-standard, multi- or single-voltage, dual-supply operation. Writing or erasing the device is done with either a 5V or 12V V_{PP} voltage, while all operations are performed with a 3.3V or 5V V_{CC}. It is fabricated with Micron's advanced CMOS floating-gate process.

The MT28F400B1 is organized into seven separately erasable blocks. To ensure that critical firmware is protected from accidental erasure or overwrite, the MT28F400B1 features a hardware-protected boot block. Writing or erasing the boot block requires either applying a super-voltage to the RP# pin or driving WP# HIGH in addition to executing the normal WRITE or ERASE sequences. This block may be used to store code implemented in low-level system recovery. The remaining blocks vary in density and are written and erased with no additional security measures.

48-PIN PLASTIC TSOP I (12mm x 20mm)

FB-2

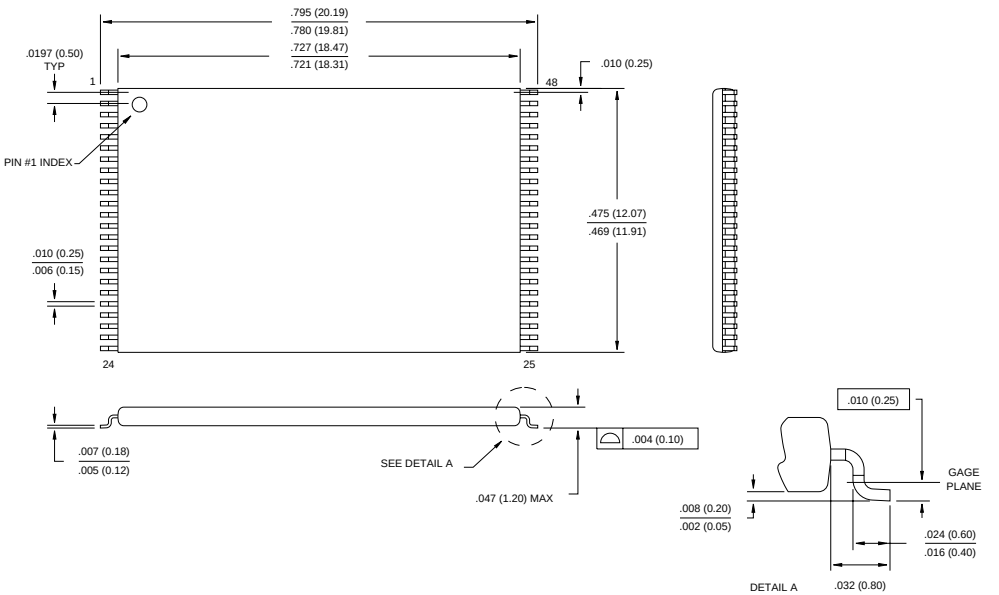

NOTE: 1. All dimensions in inches (millimeters) $\frac{\text{MAX}}{\text{MIN}}$ or typical where noted.

2. Package width and length do not include mold protrusion; allowable mold protrusion is .01" per side.

PW164

This specification provides detailed product information for the PW164-XX ImageProcessor. Table 1 contains a device list for the PW164-XX Family. Figure 1 depicts the PW164 Block Functional Diagram. Typical applications include:

⇒ LCD Monitors

⇒ Plasma Displays

⇒ Projection Displays

Table 1. PW164 Device Description

Device	Package	Temperature Range
PW164-10R/-20R	256 TBGA pkg, No keystone/nonlinear	0° to 70° C
PW164-20RK	256 TBGA, with keystone/nonlinear	0° to 70° C
PW164-20WK	352 TBGA, with keystone/nonlinear	0° to 70° C

The PW164 interfaces computer graphics and video inputs in virtually any format to a fixed frequency flat panel display. Computer images from VGA to UXGA resolution input to the chip can be resized to fit on the target display device, which can have any resolution up to SXGA. Horizontal and vertical image scalars coupled with intelligent frame locking circuitry create sharp images, centered on the screen, without user intervention.

An embedded DRAM frame buffer and memory controller perform frame rate conversion. Video data from 4:3 aspect ratio NTSC or PAL and 16:9 aspect ratio sources such as DVD is supported. Nonlinear scaling and separate horizontal and vertical scalars allow these inputs to be resized optimally for the native resolution of the display device.

An on-chip microprocessor and an included embedded software suite allow manufacturers to develop feature rich products. Programmable features include the user interface, custom start-up screen, all automatic imaging features and special screen effects. An evaluation kit is available to streamline the design process and reduce product development time.

PW164-XX requires a minimum of external components. With the incorporation of the frame buffer, resizing circuitry, and microprocessor and peripherals into the chip, the number of interconnects and the circuit board size is reduced, leading to lower costs.

3.0 Package Outline

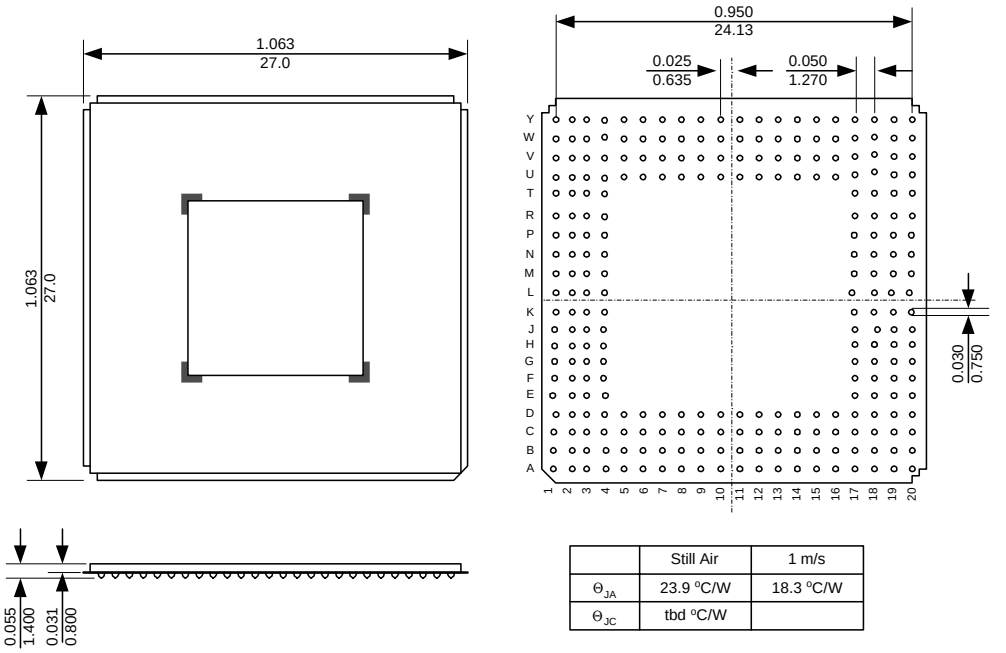

	Still Air	1 m/s
Θ_{JA}	23.9 °C/W	18.3 °C/W
Θ_{JC}	tbd °C/W	

256-pin TBGA Package

THC63LVDM83A
THC63LVDR84A
THC63LVDF83A

General Description

The THC63LVDM83A/F83A transmitter converts 28 bits of CMOS/TTL data into LVDS(Low Voltage Differential Signaling) data stream. A phase-locked transmit clock is transmitted in parallel with the data streams over a fifth LVDS link. The THC63LVDM83A can be programmed for rising edge or falling edge clocks through a dedicated pin.
The THC63LVDR84A/F84A receivers convert the LVDS data streams back into 28 bits of CMOS/TTL data with falling edge (THC63LVDF84A) or rising edge (THC63LVDR84A) clock for convenient interface with a variety of LCD panel controllers.
At a transmit clock frequency of 70Mhz, 24 bits of RGB data and 4 bits of LCD timing and control data (HSYNC, VSYNC, CNTL1, CNTL2) are transmitted at a rate of 490 Mbps per LVDS data channel.

Features

- 28:4 Data channel compression at up to 245 Megabytes per sec throughput
- Wide Frequency Range: 20 - 70 MHz suited for VGA,SVGA,XGA and SXGA
- Narrow bus (10 lines) reduces cable size 345mV swing LVDS devices for Low EMI
- On chip Input Jitter Filtering
- PLL requires No External Components
- Single 3.3V supply with 130mW(TYP)
- Low Power CMOS Design
- Power-Down Mode
- Low profile 56 Lead TSSOP Package
- Clock Edge Programmable for Transmitter
- Clock Edge Selectable as options below for Receiver
- Compatible with the National DS90C383/384

THC63LVDM83A

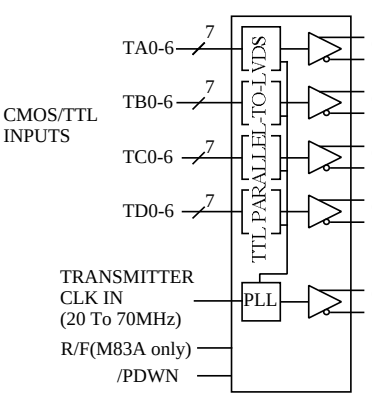

THC63LVDF84A
THC63LVDR84A

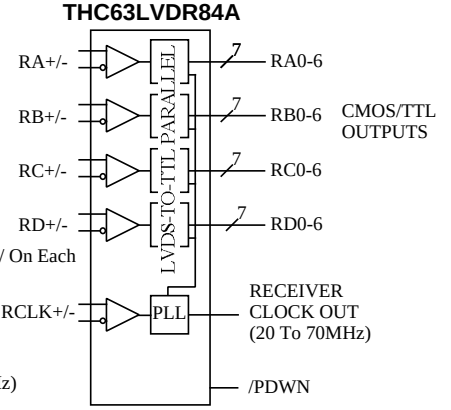

OPTIONS

CLOCK TRIGGERING	TRANSMITTER DEVICE	RECEIVER DEVICE
Falling Edge	**THC63LVDF83A/M83A(R/F pin=GND)**	**THC63LVDF84A**
Rising Edge	**THC63LVDM83A(R/F pin=Vcc)**	**THC63LVDR84A**

PIN OUT

TRANSMITTER DEVICE

THC63LVDM83A/THC63LVDF83A

VCC	1	56	TA4
TD1	2	55	TA3
TA5	3	54	TA2
TA6	4	53	GND
GND	5	52	TA1
TB0	6	51	TA0
TB1	7	50	TD0
TD2	8	49	LVDS GND
VCC	9	48	TA-
TD3	10	47	TA+
TB2	11	46	TB-
TB3	12	45	TB+
GND	13	44	LVDS VCC
TB4	14	43	LVDS GND
TB5	15	42	TC-
TD4	16	41	TC+
R/F(N/C)*	17	40	TCLK-
TD5	18	39	TCLK+
TB6	19	38	TD-
TC0	20	37	TD+
GND	21	36	LVDS GND
TC1	22	35	PLL GND
TC2	23	34	PLL VCC
TC3	24	33	PLL GND
TD6	25	32	/PDWN
VCC	26	31	CLK IN
TC4	27	30	TC6
TC5	28	29	GND

*Pin17: N/C for THC63LVDF83A

RECEIVER DEVICE

THC63LVDR84A/THC63LVDF84A

RC3	1	56	VCC
RD6	2	55	RC2
RC4	3	54	RC1
GND	4	53	RC0
RC5	5	52	GND
RC6	6	51	RB6
RD0	7	50	RD5
LVDS GND	8	49	RD4
RA-	9	48	VCC
RA+	10	47	RB5
RB-	11	46	RB4
RB+	12	45	RB3
LVDS VCC	13	44	GND
LVDS GND	14	43	RB2
RC-	15	42	RD3
RC+	16	41	RD2
RCLK-	17	40	VCC
RCLK+	18	39	RB1
RD-	19	38	RB0
RD+	20	37	RA6
LVDS GND	21	36	GND
PLL GND	22	35	RA5
PLL VCC	23	34	RD1
PLL GND	24	33	RA4
/PDWN	25	32	RA3
CLKOUT	26	31	VCC
RA0	27	30	RA2
GND	28	29	RA1

PACKAGE

56 Lead Molded Thin Shrink Small Outline Package, JEDEC

Unit: millimeters

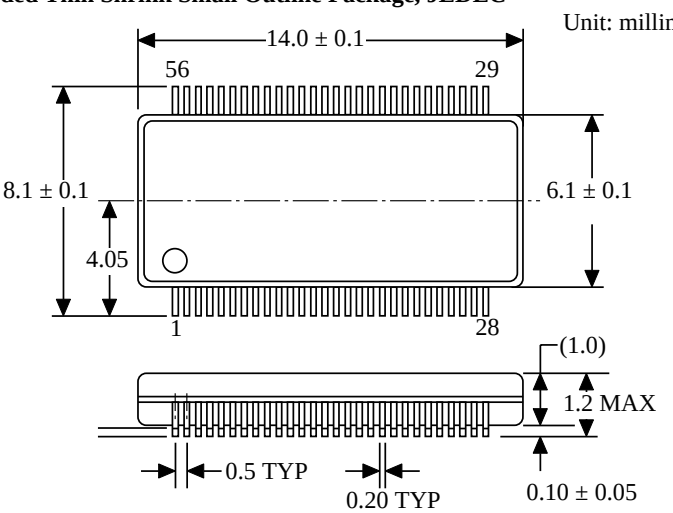

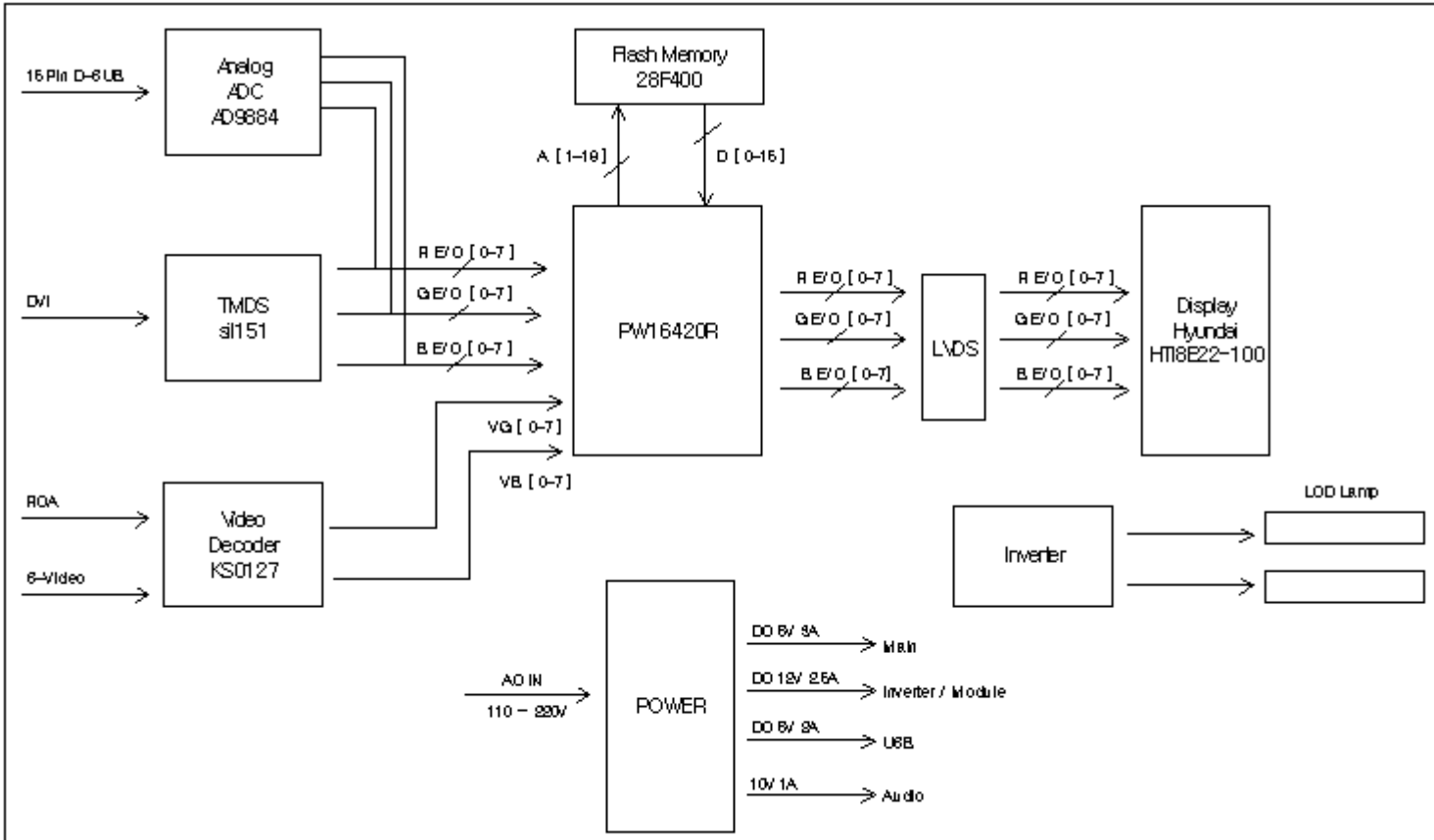
15 Pin D-SUB
Analog
ADC
AD9884
Flash Memory
28F400
A [1-19]
D [0-15]
DVI
TMDS
sil151
R E/O [0-7]
G E/O [0-7]
B E/O [0-7]
PW16420R
R E/O [0-7]
G E/O [0-7]
B E/O [0-7]
LVDS
R E/O [0-7]
G E/O [0-7]
B E/O [0-7]
Display
Hyundai
HT18E22-100
VG [0-7]
VB [0-7]
ROA
6-Video
Video
Decoder
KS0127
LCD Lamp
Inverter
AC IN
110 ~ 220V
POWER
DC 5V 3A
Main
DC 12V 2.5A
Inverter / Module
DC 5V 3A
USB
10V 1A
Audio

MAIN BOARD

NUM.	LOCATION	PART NUMBER	DESCRIPTION	REMARK
1	BD101	3540800013	COR-CHP,HH-1M3216-601	
2	BD102	3540800013	COR-CHP,HH-1M3216-601	
3	BD103	3540800013	COR-CHP,HH-1M3216-601	
4	BD104	3540800013	COR-CHP,HH-1M3216-601	
5	BD301	3540800013	COR-CHP,HH-1M3216-601	
6	BD302	3540800013	COR-CHP,HH-1M3216-601	
7	BD303	3540800013	COR-CHP,HH-1M3216-601	
8	BD304	3540800013	COR-CHP,HH-1M3216-601	
9	BD701	3540800039	COR-CHP,HB-1608-102JT	
10	BD702	3540800039	COR-CHP,HB-1608-102JT	
11	BD703	3540800039	COR-CHP,HB-1608-102JT	
12	BD704	3540800039	COR-CHP,HB-1608-102JT	
13	BD705	3540800039	COR-CHP,HB-1608-102JT	
14	BD706	3540800039	COR-CHP,HB-1608-102JT	
15	BD707	3540800039	COR-CHP,HB-1608-102JT	
16	BD708	3540800039	COR-CHP,HB-1608-102JT	
17	BD709	3540800039	COR-CHP,HB-1608-102JT	
18	BD710	3540800039	COR-CHP,HB-1608-102JT	
19	BD801	3540800013	COR-CHP,HH-1M3216-601	
20	BD802	3540800013	COR-CHP,HH-1M3216-601	
21	BD803	3540800013	COR-CHP,HH-1M3216-601	
22	BD804	3540800013	COR-CHP,HH-1M3216-601	
23	BD805	3540800013	COR-CHP,HH-1M3216-601	
24	BD806	3540800013	COR-CHP,HH-1M3216-601	
25	BD807	3540800013	COR-CHP,HH-1M3216-601	
26	BD808	3540800013	COR-CHP,HH-1M3216-601	
27	BD809	3540800013	COR-CHP,HH-1M3216-601	
28	BD810	3540800013	COR-CHP,HH-1M3216-601	
29	BD811	3540800013	COR-CHP,HH-1M3216-601	
30	BD813	3540800013	COR-CHP,HH-1M3216-601	
31	BD814	3540800013	COR-CHP,HH-1M3216-601	
32	BD815	3540800013	COR-CHP,HH-1M3216-601	
33	BD817	3540800013	COR-CHP,HH-1M3216-601	
34	BD818	3540800013	COR-CHP,HH-1M3216-601	
35	BD819	3540800013	COR-CHP,HH-1M3216-601	
36	BD901	3540800045	COR-CHP,HB-1S2012-8R0JT	
37	BD902	3540800045	COR-CHP,HB-1S2012-8R0JT	
38	BD903	3540800045	COR-CHP,HB-1S2012-8R0JT	
39	BD904	3540800043	COR-CHP,HB-1H3216-700JT	
40	BD905	3540800043	COR-CHP,HB-1H3216-700JT	
41	BD906	3540800043	COR-CHP,HB-1H3216-700JT	
42	BD907	3540800043	COR-CHP,HB-1H3216-700JT	
43	BL	3720101390	CONN-M,SMW200-08P	
44	C001	E4001020808J	CAP,CHIP 50V 47PF J 1608	
45	C002	E4001020808J	CAP,CHIP 50V 47PF J 1608	
46	C003	E4001020808J	CAP,CHIP 50V 47PF J 1608	

NUM.	LOCATION	PART NUMBER	DESCRIPTION	REMARK
47	C004	E4001020808J	CAP,CHIP 50V 47PF J 1608	
48	C005	E4001020808J	CAP,CHIP 50V 47PF J 1608	
49	C006	E4001020808J	CAP,CHIP 50V 47PF J 1608	
50	C007	E4001020808J	CAP,CHIP 50V 47PF J 1608	
51	C008	E4001020808J	CAP,CHIP 50V 47PF J 1608	
52	C009	E4001020808J	CAP,CHIP 50V 47PF J 1608	
53	C010	E4001020808J	CAP,CHIP 50V 47PF J 1608	
54	C011	E4001020808J	CAP,CHIP 50V 47PF J 1608	
55	C012	E4001020808J	CAP,CHIP 50V 47PF J 1608	
56	C013	E4001020808J	CAP,CHIP 50V 47PF J 1608	
57	C014	E4001020808J	CAP,CHIP 50V 47PF J 1608	
58	C015	E4001020808J	CAP,CHIP 50V 47PF J 1608	
59	C016	E4001020808J	CAP,CHIP 50V 47PF J 1608	
60	C017	E4001020808J	CAP,CHIP 50V 47PF J 1608	
61	C018	E4001020808J	CAP,CHIP 50V 47PF J 1608	
62	C019	E4001020808J	CAP,CHIP 50V 47PF J 1608	
63	C020	E4001020808J	CAP,CHIP 50V 47PF J 1608	
64	C021	E4001020808J	CAP,CHIP 50V 47PF J 1608	
65	C022	E4001020808J	CAP,CHIP 50V 47PF J 1608	
66	C023	E4001020808J	CAP,CHIP 50V 47PF J 1608	
67	C024	E4001020808J	CAP,CHIP 50V 47PF J 1608	
68	C025	E4001020808J	CAP,CHIP 50V 47PF J 1608	
69	C026	E4001020808J	CAP,CHIP 50V 47PF J 1608	
70	C027	E4001020808J	CAP,CHIP 50V 47PF J 1608	
71	C028	E4001020808J	CAP,CHIP 50V 47PF J 1608	
72	C029	E4001020808J	CAP,CHIP 50V 47PF J 1608	
73	C030	E4001020808J	CAP,CHIP 50V 47PF J 1608	
74	C031	E4001020808J	CAP,CHIP 50V 47PF J 1608	
75	C032	E4001020808J	CAP,CHIP 50V 47PF J 1608	
76	C033	E4001020808J	CAP,CHIP 50V 47PF J 1608	
77	C034	E4001020808J	CAP,CHIP 50V 47PF J 1608	
78	C035	E4001020808J	CAP,CHIP 50V 47PF J 1608	
79	C036	E4001020808J	CAP,CHIP 50V 47PF J 1608	
80	C037	E4001020808J	CAP,CHIP 50V 47PF J 1608	
81	C038	E4001020808J	CAP,CHIP 50V 47PF J 1608	
82	C039	E4001020808J	CAP,CHIP 50V 47PF J 1608	
83	C040	E4001020808J	CAP,CHIP 50V 47PF J 1608	
84	C041	E4001020808J	CAP,CHIP 50V 47PF J 1608	
85	C042	E4001020808J	CAP,CHIP 50V 47PF J 1608	
86	C043	E4001020808J	CAP,CHIP 50V 47PF J 1608	
87	C044	E4001020808J	CAP,CHIP 50V 47PF J 1608	
88	C045	E4001020808J	CAP,CHIP 50V 47PF J 1608	
89	C046	E4001020808J	CAP,CHIP 50V 47PF J 1608	
90	C047	E4001020808J	CAP,CHIP 50V 47PF J 1608	
91	C048	E4001020808J	CAP,CHIP 50V 47PF J 1608	
92	C051	2121040045	CAP-C-C,0.1UF 50V Z Y5V 1	
93	C052	2121040045	CAP-C-C,0.1UF 50V Z Y5V 1	
94	C053	2121040045	CAP-C-C,0.1UF 50V Z Y5V 1	

NUM.	LOCATION	PART NUMBER	DESCRIPTION	REMARK
95	C054	2121040045	CAP-C-C,0.1UF 50V Z Y5V 1	
96	C055	2121040045	CAP-C-C,0.1UF 50V Z Y5V 1	
97	C056	2121040045	CAP-C-C,0.1UF 50V Z Y5V 1	
98	C057	2121040045	CAP-C-C,0.1UF 50V Z Y5V 1	
99	C058	2121040045	CAP-C-C,0.1UF 50V Z Y5V 1	
100	C059	2121040045	CAP-C-C,0.1UF 50V Z Y5V 1	
101	C060	2121040045	CAP-C-C,0.1UF 50V Z Y5V 1	
102	C061	2121040045	CAP-C-C,0.1UF 50V Z Y5V 1	
103	C062	2121040045	CAP-C-C,0.1UF 50V Z Y5V 1	
104	C063	2121040045	CAP-C-C,0.1UF 50V Z Y5V 1	
105	C101	2121040045	CAP-C-C,0.1UF 50V Z Y5V 1	
106	C102	2121040045	CAP-C-C,0.1UF 50V Z Y5V 1	
107	C103	2121040045	CAP-C-C,0.1UF 50V Z Y5V 1	
108	C104	2121040045	CAP-C-C,0.1UF 50V Z Y5V 1	
109	C105	2121040045	CAP-C-C,0.1UF 50V Z Y5V 1	
110	C106	2121040045	CAP-C-C,0.1UF 50V Z Y5V 1	
111	C107	2121040045	CAP-C-C,0.1UF 50V Z Y5V 1	
112	C108	2121040045	CAP-C-C,0.1UF 50V Z Y5V 1	
113	C109	2121040045	CAP-C-C,0.1UF 50V Z Y5V 1	
114	C110	2121040045	CAP-C-C,0.1UF 50V Z Y5V 1	
115	C111	2121040045	CAP-C-C,0.1UF 50V Z Y5V 1	
116	C112	2121040045	CAP-C-C,0.1UF 50V Z Y5V 1	
117	C113	2121040045	CAP-C-C,0.1UF 50V Z Y5V 1	
118	C119	2121040045	CAP-C-C,0.1UF 50V Z Y5V 1	
119	C120	2121040045	CAP-C-C,0.1UF 50V Z Y5V 1	
120	C201	CK7FXA1H392K	C-CCP 3900P 50V 10 X7R 06	
121	C202	2123930009	CAP-C-C,0.039UF 50V K X7R	
122	C203	2124730035	CAP-C-C,0.047UF 50V Z Y5V	
123	C204	2124730035	CAP-C-C,0.047UF 50V Z Y5V	
124	C206	2124730035	CAP-C-C,0.047UF 50V Z Y5V	
125	C207	2121040045	CAP-C-C,0.1UF 50V Z Y5V 1	
126	C208	2121000029	CAP-C-C,10PF 50V J COG 16	
127	C209	2121000029	CAP-C-C,10PF 50V J COG 16	
128	C210	2121000029	CAP-C-C,10PF 50V J COG 16	
129	C211	2121040045	CAP-C-C,0.1UF 50V Z Y5V 1	
130	C212	2121040045	CAP-C-C,0.1UF 50V Z Y5V 1	
131	C213	2121040045	CAP-C-C,0.1UF 50V Z Y5V 1	
132	C214	2121040045	CAP-C-C,0.1UF 50V Z Y5V 1	
133	C215	2121040045	CAP-C-C,0.1UF 50V Z Y5V 1	
134	C216	2121040045	CAP-C-C,0.1UF 50V Z Y5V 1	
135	C217	2121040045	CAP-C-C,0.1UF 50V Z Y5V 1	
136	C218	2121040045	CAP-C-C,0.1UF 50V Z Y5V 1	
137	C219	2121040045	CAP-C-C,0.1UF 50V Z Y5V 1	
138	C220	2121040045	CAP-C-C,0.1UF 50V Z Y5V 1	
139	C221	2121040045	CAP-C-C,0.1UF 50V Z Y5V 1	
140	C222	2121040045	CAP-C-C,0.1UF 50V Z Y5V 1	
141	C223	2121040045	CAP-C-C,0.1UF 50V Z Y5V 1	
142	C224	2121040045	CAP-C-C,0.1UF 50V Z Y5V 1	

NUM.	LOCATION	PART NUMBER	DESCRIPTION	REMARK
143	C225	2121040045	CAP-C-C,0.1UF 50V Z Y5V 1	
144	C226	2121040045	CAP-C-C,0.1UF 50V Z Y5V 1	
145	C227	2121040045	CAP-C-C,0.1UF 50V Z Y5V 1	
146	C228	2121040045	CAP-C-C,0.1UF 50V Z Y5V 1	
147	C229	2121040045	CAP-C-C,0.1UF 50V Z Y5V 1	
148	C230	2121040045	CAP-C-C,0.1UF 50V Z Y5V 1	
149	C231	2121040045	CAP-C-C,0.1UF 50V Z Y5V 1	
150	C232	2121040045	CAP-C-C,0.1UF 50V Z Y5V 1	
151	C233	2121040045	CAP-C-C,0.1UF 50V Z Y5V 1	
152	C234	2121040045	CAP-C-C,0.1UF 50V Z Y5V 1	
153	C235	2121040045	CAP-C-C,0.1UF 50V Z Y5V 1	
154	C236	2121040045	CAP-C-C,0.1UF 50V Z Y5V 1	
155	C237	2121040045	CAP-C-C,0.1UF 50V Z Y5V 1	
156	C238	2121040045	CAP-C-C,0.1UF 50V Z Y5V 1	
157	C301	2121040045	CAP-C-C,0.1UF 50V Z Y5V 1	
158	C302	2121040045	CAP-C-C,0.1UF 50V Z Y5V 1	
159	C303	2121040045	CAP-C-C,0.1UF 50V Z Y5V 1	
160	C304	2121040045	CAP-C-C,0.1UF 50V Z Y5V 1	
161	C305	2121040045	CAP-C-C,0.1UF 50V Z Y5V 1	
162	C306	2121040045	CAP-C-C,0.1UF 50V Z Y5V 1	
163	C307	2121040045	CAP-C-C,0.1UF 50V Z Y5V 1	
164	C308	2121040045	CAP-C-C,0.1UF 50V Z Y5V 1	
165	C309	2121040045	CAP-C-C,0.1UF 50V Z Y5V 1	
166	C310	CC7FCA1H180J	CAP-CC,18PF 50V J COG 160	
167	C311	CC7FCA1H180J	CAP-CC,18PF 50V J COG 160	
168	C312	2121000029	CAP-C-C,10PF 50V J COG 16	
169	C313	2121000029	CAP-C-C,10PF 50V J COG 16	
170	C314	2121000029	CAP-C-C,10PF 50V J COG 16	
171	C315	2121000029	CAP-C-C,10PF 50V J COG 16	
172	C316	2121000029	CAP-C-C,10PF 50V J COG 16	
173	C317	2121040045	CAP-C-C,0.1UF 50V Z Y5V 1	
174	C318	2121040045	CAP-C-C,0.1UF 50V Z Y5V 1	
175	C319	2121040045	CAP-C-C,0.1UF 50V Z Y5V 1	
176	C320	2121040045	CAP-C-C,0.1UF 50V Z Y5V 1	
177	C321	2121040045	CAP-C-C,0.1UF 50V Z Y5V 1	
178	C322	2121040045	CAP-C-C,0.1UF 50V Z Y5V 1	
179	C323	2121040045	CAP-C-C,0.1UF 50V Z Y5V 1	
180	C324	2121040045	CAP-C-C,0.1UF 50V Z Y5V 1	
181	C325	2121040045	CAP-C-C,0.1UF 50V Z Y5V 1	
182	C326	2121040045	CAP-C-C,0.1UF 50V Z Y5V 1	
183	C327	2121040045	CAP-C-C,0.1UF 50V Z Y5V 1	
184	C328	2121040045	CAP-C-C,0.1UF 50V Z Y5V 1	
185	C329	2121040045	CAP-C-C,0.1UF 50V Z Y5V 1	
186	C330	2121040045	CAP-C-C,0.1UF 50V Z Y5V 1	
187	C401	2121040045	CAP-C-C,0.1UF 50V Z Y5V 1	
188	C402	2121040045	CAP-C-C,0.1UF 50V Z Y5V 1	
189	C403	2121040045	CAP-C-C,0.1UF 50V Z Y5V 1	
190	C404	2121040045	CAP-C-C,0.1UF 50V Z Y5V 1	

NUM.	LOCATION	PART NUMBER	DESCRIPTION	REMARK
191	C405	2121040045	CAP-C-C,0.1UF 50V Z Y5V 1	
192	C501	2121040045	CAP-C-C,0.1UF 50V Z Y5V 1	
193	C502	2121040045	CAP-C-C,0.1UF 50V Z Y5V 1	
194	C503	2121040045	CAP-C-C,0.1UF 50V Z Y5V 1	
195	C504	2121040045	CAP-C-C,0.1UF 50V Z Y5V 1	
196	C505	2121040045	CAP-C-C,0.1UF 50V Z Y5V 1	
197	C506	2121040045	CAP-C-C,0.1UF 50V Z Y5V 1	
198	C507	2121040045	CAP-C-C,0.1UF 50V Z Y5V 1	
199	C508	2121040045	CAP-C-C,0.1UF 50V Z Y5V 1	
200	C509	2121040045	CAP-C-C,0.1UF 50V Z Y5V 1	
201	C51	2126800012	CAP-C-C,68PF 25V J COG 16	
202	C510	2121040045	CAP-C-C,0.1UF 50V Z Y5V 1	
203	C511	2121040045	CAP-C-C,0.1UF 50V Z Y5V 1	
204	C512	2121040045	CAP-C-C,0.1UF 50V Z Y5V 1	
205	C513	2121040045	CAP-C-C,0.1UF 50V Z Y5V 1	
206	C514	2121040045	CAP-C-C,0.1UF 50V Z Y5V 1	
207	C515	2121040045	CAP-C-C,0.1UF 50V Z Y5V 1	
208	C516	2121040045	CAP-C-C,0.1UF 50V Z Y5V 1	
209	C517	2121040045	CAP-C-C,0.1UF 50V Z Y5V 1	
210	C518	2121040045	CAP-C-C,0.1UF 50V Z Y5V 1	
211	C519	2121040045	CAP-C-C,0.1UF 50V Z Y5V 1	
212	C52	2121000029	CAP-C-C,10PF 50V J COG 16	
213	C520	2121040045	CAP-C-C,0.1UF 50V Z Y5V 1	
214	C521	2121040045	CAP-C-C,0.1UF 50V Z Y5V 1	
215	C522	2121040045	CAP-C-C,0.1UF 50V Z Y5V 1	
216	C523	2121040045	CAP-C-C,0.1UF 50V Z Y5V 1	
217	C524	2121040045	CAP-C-C,0.1UF 50V Z Y5V 1	
218	C53	2121000029	CAP-C-C,10PF 50V J COG 16	
219	C54	CC7FCA1H220J	CAP-CC,22PF 50V J 1608	
220	C55	2121000029	CAP-C-C,10PF 50V J COG 16	
221	C56	2121000029	CAP-C-C,10PF 50V J COG 16	
222	C601	2121040045	CAP-C-C,0.1UF 50V Z Y5V 1	
223	C602	2121040045	CAP-C-C,0.1UF 50V Z Y5V 1	
224	C603	2121050045	CAP-C-C,1UF 50V Z Y5V 160	
225	C604	2121040045	CAP-C-C,0.1UF 50V Z Y5V 1	
226	C605	2121040045	CAP-C-C,0.1UF 50V Z Y5V 1	
227	C606	2121040045	CAP-C-C,0.1UF 50V Z Y5V 1	
228	C607	2121040045	CAP-C-C,0.1UF 50V Z Y5V 1	
229	C608	2121040045	CAP-C-C,0.1UF 50V Z Y5V 1	
230	C609	2121040045	CAP-C-C,0.1UF 50V Z Y5V 1	
231	C610	2121040045	CAP-C-C,0.1UF 50V Z Y5V 1	
232	C611	2121040045	CAP-C-C,0.1UF 50V Z Y5V 1	
233	C701	2121040045	CAP-C-C,0.1UF 50V Z Y5V 1	
234	C702	2121040045	CAP-C-C,0.1UF 50V Z Y5V 1	
235	C703	2121040045	CAP-C-C,0.1UF 50V Z Y5V 1	
236	C704	2121040045	CAP-C-C,0.1UF 50V Z Y5V 1	
237	C801	2121040045	CAP-C-C,0.1UF 50V Z Y5V 1	
238	C802	2121040045	CAP-C-C,0.1UF 50V Z Y5V 1	

NUM.	LOCATION	PART NUMBER	DESCRIPTION	REMARK
239	C803	2121040045	CAP-C-C,0.1UF 50V Z Y5V 1	
240	C804	2121040045	CAP-C-C,0.1UF 50V Z Y5V 1	
241	C805	2121040045	CAP-C-C,0.1UF 50V Z Y5V 1	
242	C806	2121040045	CAP-C-C,0.1UF 50V Z Y5V 1	
243	C807	2121040045	CAP-C-C,0.1UF 50V Z Y5V 1	
244	C808	2121040045	CAP-C-C,0.1UF 50V Z Y5V 1	
245	C809	2121040045	CAP-C-C,0.1UF 50V Z Y5V 1	
246	C810	2121040045	CAP-C-C,0.1UF 50V Z Y5V 1	
247	C811	2121040045	CAP-C-C,0.1UF 50V Z Y5V 1	
248	C812	2121040045	CAP-C-C,0.1UF 50V Z Y5V 1	
249	C813	2121040045	CAP-C-C,0.1UF 50V Z Y5V 1	
250	C814	2121040045	CAP-C-C,0.1UF 50V Z Y5V 1	
251	C815	2121040045	CAP-C-C,0.1UF 50V Z Y5V 1	
252	C816	2121040045	CAP-C-C,0.1UF 50V Z Y5V 1	
253	C817	2121040045	CAP-C-C,0.1UF 50V Z Y5V 1	
254	C818	2121040045	CAP-C-C,0.1UF 50V Z Y5V 1	
255	C819	2121040045	CAP-C-C,0.1UF 50V Z Y5V 1	
256	C820	2121040045	CAP-C-C,0.1UF 50V Z Y5V 1	
257	C821	2121040045	CAP-C-C,0.1UF 50V Z Y5V 1	
258	C822	2121040045	CAP-C-C,0.1UF 50V Z Y5V 1	
259	C823	2121040045	CAP-C-C,0.1UF 50V Z Y5V 1	
260	C824	2121040045	CAP-C-C,0.1UF 50V Z Y5V 1	
261	C825	2121040045	CAP-C-C,0.1UF 50V Z Y5V 1	
262	C904	E4001020808J	CAP,CHIP 50V 47PF J 1608	
263	C905	E4001020808J	CAP,CHIP 50V 47PF J 1608	
264	C906	E4001020808J	CAP,CHIP 50V 47PF J 1608	
265	C907	E4001020808J	CAP,CHIP 50V 47PF J 1608	
266	C908	E4001020808J	CAP,CHIP 50V 47PF J 1608	
267	C951	2121040045	CAP-C-C,0.1UF 50V Z Y5V 1	
268	C952	2121040045	CAP-C-C,0.1UF 50V Z Y5V 1	
269	C953	2121040045	CAP-C-C,0.1UF 50V Z Y5V 1	
270	C954	2121040045	CAP-C-C,0.1UF 50V Z Y5V 1	
271	C987	E4001020808J	CAP,CHIP 50V 47PF J 1608	
272	C988	E4001020808J	CAP,CHIP 50V 47PF J 1608	
273	C989	E4001020808J	CAP,CHIP 50V 47PF J 1608	
274	CN11	3720101674	CONN-M,DF14A-20P-1.25H 20	
275	CN21	3720101674	CONN-M,DF14A-20P-1.25H 20	
276	D901	3100100038	DI-AR,KDS226 SMD	
277	D902	3100100038	DI-AR,KDS226 SMD	
278	D903	3100100038	DI-AR,KDS226 SMD	
279	D904	3101000376	DI-ZN,Z02W6.2V SMD	
280	D905	3101000376	DI-ZN,Z02W6.2V SMD	
281	D906	3101000376	DI-ZN,Z02W6.2V SMD	
282	D907	3101000376	DI-ZN,Z02W6.2V SMD	
283	D908	3101000376	DI-ZN,Z02W6.2V SMD	
284	D909	3101000376	DI-ZN,Z02W6.2V SMD	
285	D910	3101000376	DI-ZN,Z02W6.2V SMD	
286	D921	DTRLS4148	DIODE,CHIP S/W RLS4148	

NUM.	LOCATION	PART NUMBER	DESCRIPTION	REMARK
287	D922	DTRLS4148	DIODE,CHIP S/W RLS4148	
288	D923	DTRLS4148	DIODE,CHIP S/W RLS4148	
289	D924	DTRLS4148	DIODE,CHIP S/W RLS4148	
290	DVI	3720101980	CONN-M,YDW200-20 20	
291	EL101	2012200006	CAP-AL-C,22UF 16V M 6341	
292	EL102	2012200006	CAP-AL-C,22UF 16V M 6341	
293	EL103	2012200006	CAP-AL-C,22UF 16V M 6341	
294	EL104	2012200006	CAP-AL-C,22UF 16V M 6341	
295	EL105	2012200006	CAP-AL-C,22UF 16V M 6341	
296	EL301	2012200006	CAP-AL-C,22UF 16V M 6341	
297	EL302	2012200006	CAP-AL-C,22UF 16V M 6341	
298	EL303	2012200006	CAP-AL-C,22UF 16V M 6341	
299	EL304	2012200006	CAP-AL-C,22UF 16V M 6341	
300	EL401	2011000006	CAP-AL-C,10UF 16V M 4052	
301	EL402	2011000006	CAP-AL-C,10UF 16V M 4052	
302	EL501	2011000006	CAP-AL-C,10UF 16V M 4052	
303	EL701	2011000006	CAP-AL-C,10UF 16V M 4052	
304	EL801	2011010008	CAP-AL-C,100UF 25V M 8063	
305	EL802	2011010008	CAP-AL-C,100UF 25V M 8063	
306	EL803	2011010008	CAP-AL-C,100UF 25V M 8063	
307	EL804	2012210005	CAP-AL-C,220UF 6.3V M 635	
308	EL805	2012210005	CAP-AL-C,220UF 6.3V M 635	
309	EL806	2012210005	CAP-AL-C,220UF 6.3V M 635	
310	EL807	2012210005	CAP-AL-C,220UF 6.3V M 635	
311	EL808	2012210005	CAP-AL-C,220UF 6.3V M 635	
312	EL809	2012210005	CAP-AL-C,220UF 6.3V M 635	
313	EL810	2012210005	CAP-AL-C,220UF 6.3V M 635	
314	EL811	2011010014	CAP-AL-C,100UF 16V M 6357	
315	EL812	2011010014	CAP-AL-C,100UF 16V M 6357	
316	EL813	2012210005	CAP-AL-C,220UF 6.3V M 635	
317	EL814	2012210005	CAP-AL-C,220UF 6.3V M 635	
318	EL815	2011010014	CAP-AL-C,100UF 16V M 6357	
319	EL816	2011010014	CAP-AL-C,100UF 16V M 6357	
320	EL817	2011010014	CAP-AL-C,100UF 16V M 6357	
321	EL818	2012210005	CAP-AL-C,220UF 6.3V M 635	
322	EL819	2012210005	CAP-AL-C,220UF 6.3V M 635	
323	EL820	2012210005	CAP-AL-C,220UF 6.3V M 635	
324	EL821	2012210005	CAP-AL-C,220UF 6.3V M 635	
325	EL822	E4001025001M	CAP,CHIP ALUM 33UF 25VT	
326	EL823	2011010014	CAP-AL-C,100UF 16V M 6357	
327	EL824	2013310001	CAP-AL-C,330UF 16V M 8010	
328	EL825	E4001025001M	CAP,CHIP ALUM 33UF 25VT	
329	L81	3500101731	INDUCT-FIX,DHA1206-33U3 K	
330	LCD	3720101388	CONN-M,SMW200-06P	
331	OSD	3720101393	CONN-M,SMW200-10P	
332	PWR	3720101392	CONN-M,SMW200-09P	
333	Q401	TT2N3906S	TR,SMD 2N3906S	
334	Q402	TT2N3904D	TR,SMD 2N3904D TAPPING	

NUM.	LOCATION	PART NUMBER	DESCRIPTION	REMARK
335	Q6	TT2N3904D	TR,SMD 2N3904D TAPPING	
336	Q801	TT2N3904D	TR,SMD 2N3904D TAPPING	
337	Q802	TT2N3904D	TR,SMD 2N3904D TAPPING	
338	Q803	TT2N3904D	TR,SMD 2N3904D TAPPING	
339	R101	RK1JC0T0000J	RES-C,0 0.063W J 1608	
340	R102	RK1JC0T0000J	RES-C,0 0.063W J 1608	
341	R103	RK1JC0T0000J	RES-C,0 0.063W J 1608	
342	R104	RK1JC0T0472J	RES CHIP 4.7K 5% 1/16W	
343	R105	RK1JC0T0000J	RES-C,0 0.063W J 1608	
344	R106	RK1JC0T0000J	RES-C,0 0.063W J 1608	
345	R108	RK1JC0T0511J	RES-C,510 0.063W J 1608	
346	R110	RK1JC0T0000J	RES-C,0 0.063W J 1608	
347	R112	RK1JC0T0000J	RES-C,0 0.063W J 1608	
348	R201	RK1JC0T0332J	RES CHIP 3.3K 5% 1/16W	
349	R202	RK1JC0T0103J	RES-C,10K 0.063W J 1608	
350	R203	RK1JC0T0470J	RES-C,47 0.063W J 1608	
351	R204	RK1JC0T0470J	RES-C,47 0.063W J 1608	
352	R205	RK1JC0T0470J	RES-C,47 0.063W J 1608	
353	R301	2607509008	RES-C,75 0.063W J 1608	
354	R302	2607509008	RES-C,75 0.063W J 1608	
355	R303	2607509008	RES-C,75 0.063W J 1608	
356	R304	RK1JC0T0470J	RES-C,47 0.063W J 1608	
357	R305	RK1JC0T0470J	RES-C,47 0.063W J 1608	
358	R306	RK1JC0T0470J	RES-C,47 0.063W J 1608	
359	R310	RK1JC0T0103J	RES-C,10K 0.063W J 1608	
360	R311	RK1JC0T0103J	RES-C,10K 0.063W J 1608	
361	R312	RK1JC0T0103J	RES-C,10K 0.063W J 1608	
362	R313	RK1JC0T0470J	RES-C,47 0.063W J 1608	
363	R314	RK1JC0T0470J	RES-C,47 0.063W J 1608	
364	R333	RK1JC0T0332J	RES CHIP 3.3K 5% 1/16W	
365	R401	RK1JC0T0000J	RES-C,0 0.063W J 1608	
366	R403	RK1JC0T0332J	RES CHIP 3.3K 5% 1/16W	
367	R404	RK1JC0T0332J	RES CHIP 3.3K 5% 1/16W	
368	R405	RK1JC0T0102J	RES-C,1K 0.063W J 1608	
369	R406	RK1JC0T0332J	RES CHIP 3.3K 5% 1/16W	
370	R407	RK1JC0T0102J	RES-C,1K 0.063W J 1608	
371	R408	2603900005	RES-C,390 0.063W J 1608	
372	R409	2602001016	RES-C,2K 0.063W F 1608	
373	R410	2602001016	RES-C,2K 0.063W F 1608	
374	R411	2602001016	RES-C,2K 0.063W F 1608	
375	R412	2602001016	RES-C,2K 0.063W F 1608	
376	R501	RK1JC0T0332J	RES CHIP 3.3K 5% 1/16W	
377	R502	RK1JC0T0332J	RES CHIP 3.3K 5% 1/16W	
378	R503	RK1JC0T0472J	RES CHIP 4.7K 5% 1/16W	
379	R504	RK1JC0T0470J	RES-C,47 0.063W J 1608	
380	R505	RK1JC0T0470J	RES-C,47 0.063W J 1608	
381	R506	RK1JC0T0470J	RES-C,47 0.063W J 1608	
382	R601	RK1JC0T0470J	RES-C,47 0.063W J 1608	

NUM.	LOCATION	PART NUMBER	DESCRIPTION	REMARK
383	R602	RK1JC0T0470J	RES-C,47 0.063W J 1608	
384	R603	RK1JC0T0332J	RES CHIP 3.3K 5% 1/16W	
385	R604	RK1JC0T0472J	RES CHIP 4.7K 5% 1/16W	
386	R605	RK1JC0T0472J	RES CHIP 4.7K 5% 1/16W	
387	R607	RK1JC0T0104J	RES-C,100K 0.063W J 1608	
388	R608	RK1JC0T0101J	RES-C,100 0.063W J 1608	
389	R609	RK1JC0T0000J	RES-C,0 0.063W J 1608	
390	R610	RK1JC0T0103J	RES-C,10K 0.063W J 1608	
391	R611	RK1JC0T0105J	RES-C,1M 0.063W J 1608	
392	R612	RK1JC0T0103J	RES-C,10K 0.063W J 1608	
393	R613	RK1JC0T0103J	RES-C,10K 0.063W J 1608	
394	R614	RK1JC0T0103J	RES-C,10K 0.063W J 1608	
395	R615	RK1JC0T0103J	RES-C,10K 0.063W J 1608	
396	R616	RK1JC0T0103J	RES-C,10K 0.063W J 1608	
397	R617	RK1JC0T0103J	RES-C,10K 0.063W J 1608	
398	R801	RK1JC0T0472J	RES CHIP 4.7K 5% 1/16W	
399	R802	RK1JC0T0472J	RES CHIP 4.7K 5% 1/16W	
400	R803	RK1JC0T0472J	RES CHIP 4.7K 5% 1/16W	
401	R804	RK1JC0T0472J	RES CHIP 4.7K 5% 1/16W	
402	R805	RK1JC0T0472J	RES CHIP 4.7K 5% 1/16W	
403	R806	RK1JC0T0103J	RES-C,10K 0.063W J 1608	
404	R807	RK1JC0T0000J	RES-C,0 0.063W J 1608	
405	R808	RK1JC0T0000J	RES-C,0 0.063W J 1608	
406	R809	RK1JC0T0000J	RES-C,0 0.063W J 1608	
407	R810	RK1JC0T0000J	RES-C,0 0.063W J 1608	
408	R904	RK1JC0T0472J	RES CHIP 4.7K 5% 1/16W	
409	R905	RK1JC0T0472J	RES CHIP 4.7K 5% 1/16W	
410	R906	RK1JC0T0103J	RES-C,10K 0.063W J 1608	
411	R907	2607509010	RES-C,75 0.063W F 1608	
412	R908	2607509010	RES-C,75 0.063W F 1608	
413	R909	2607509010	RES-C,75 0.063W F 1608	
414	R910	RK1JC0T0473J	RES-C,47K 0.063W J 1608	
415	R911	RK1JC0T0473J	RES-C,47K 0.063W J 1608	
416	R912	RK1JC0T0821J	RES CHIP 820 5% 1/16W	
417	R913	RK1JC0T0821J	RES CHIP 820 5% 1/16W	
418	R914	RK1JC0T0821J	RES CHIP 820 5% 1/16W	
419	R915	2607509010	RES-C,75 0.063W F 1608	
420	R916	2607509010	RES-C,75 0.063W F 1608	
421	R917	2607509010	RES-C,75 0.063W F 1608	
422	R918	RK1JC0T0101J	RES-C,100 0.063W J 1608	
423	R919	RK1JC0T0101J	RES-C,100 0.063W J 1608	
424	R920	RK1JC0T0473J	RES-C,47K 0.063W J 1608	
425	R921	RK1JC0T0103J	RES-C,10K 0.063W J 1608	
426	R922	RK1JC0T0821J	RES CHIP 820 5% 1/16W	
427	R923	RK1JC0T0821J	RES CHIP 820 5% 1/16W	
428	R924	RK1JC0T0821J	RES CHIP 820 5% 1/16W	
429	R925	RK1JC0T0821J	RES CHIP 820 5% 1/16W	
430	R926	RK1JC0T0821J	RES CHIP 820 5% 1/16W	

NUM.	LOCATION	PART NUMBER	DESCRIPTION	REMARK
431	R927	RK1JC0T0821J	RES CHIP 820 5% 1/16W	
432	RN1	2591200002	RES-C-NET,120 0.063W J 32	
433	RN10	2591200002	RES-C-NET,120 0.063W J 32	
434	RN11	2591200002	RES-C-NET,120 0.063W J 32	
435	RN12	2591200002	RES-C-NET,120 0.063W J 32	
436	RN13	2591200002	RES-C-NET,120 0.063W J 32	
437	RN14	2591200002	RES-C-NET,120 0.063W J 32	
438	RN15	2591200002	RES-C-NET,120 0.063W J 32	
439	RN16	2591200002	RES-C-NET,120 0.063W J 32	
440	RN17	2591200002	RES-C-NET,120 0.063W J 32	
441	RN18	2591200002	RES-C-NET,120 0.063W J 32	
442	RN19	2591200002	RES-C-NET,120 0.063W J 32	
443	RN2	2591200002	RES-C-NET,120 0.063W J 32	
444	RN20	2591200002	RES-C-NET,120 0.063W J 32	
445	RN21	2591200002	RES-C-NET,120 0.063W J 32	
446	RN22	2591200002	RES-C-NET,120 0.063W J 32	
447	RN23	2591200002	RES-C-NET,120 0.063W J 32	
448	RN24	2591200002	RES-C-NET,120 0.063W J 32	
449	RN25	2594709002	RES-C-NET,47 0.063W J 321	
450	RN26	2594709002	RES-C-NET,47 0.063W J 321	
451	RN27	2594709002	RES-C-NET,47 0.063W J 321	
452	RN28	2594709002	RES-C-NET,47 0.063W J 321	
453	RN29	2594709002	RES-C-NET,47 0.063W J 321	
454	RN3	2591200002	RES-C-NET,120 0.063W J 32	
455	RN30	2594709002	RES-C-NET,47 0.063W J 321	
456	RN31	2594709002	RES-C-NET,47 0.063W J 321	
457	RN32	2594709002	RES-C-NET,47 0.063W J 321	
458	RN33	2594709002	RES-C-NET,47 0.063W J 321	
459	RN34	2594709002	RES-C-NET,47 0.063W J 321	
460	RN35	2594709002	RES-C-NET,47 0.063W J 321	
461	RN36	2594709002	RES-C-NET,47 0.063W J 321	
462	RN37	2594709002	RES-C-NET,47 0.063W J 321	
463	RN38	2594709002	RES-C-NET,47 0.063W J 321	
464	RN39	2594709002	RES-C-NET,47 0.063W J 321	
465	RN4	2591200002	RES-C-NET,120 0.063W J 32	
466	RN40	2594709002	RES-C-NET,47 0.063W J 321	
467	RN5	2591200002	RES-C-NET,120 0.063W J 32	
468	RN6	2591200002	RES-C-NET,120 0.063W J 32	
469	RN7	2591200002	RES-C-NET,120 0.063W J 32	
470	RN8	2591200002	RES-C-NET,120 0.063W J 32	
471	RN9	2591200002	RES-C-NET,120 0.063W J 32	
472	U1	3201000544	IC-DIGI,SII151 QFP	
473	U101	3201000543	IC-DIGI,THC63LVDM83A TSOP	
474	U102	3201000543	IC-DIGI,THC63LVDM83A TSOP	
475	U11	3202001506	IC-TTL,74LCX74 SOI	
476	U12	3202001508	IC-TTL,74LCX126MX SOI	
477	U2	3200001519	IC-LIN,AD9884AKS-140 QFP	
478	U21	3202001508	IC-TTL,74LCX126MX SOI	

NUM.	LOCATION	PART NUMBER	DESCRIPTION	REMARK
479	U22	3202001505	IC-TTL,74LCX14M14A SOI	
480	U3	3200001520	IC-LIN,S5D0127X01 QFP	
481	U4	3203000854	IC-MEMO,MT28F400B3WG-9T T	
482	U41	3203000755	IC-MEMO,AT24C164-10SC-2.7	
483	U5	3204000615	IC-INT,PW164-20R TBGA BGA	
484	U61	3200001403	IC-LIN,ICS501M SOI	
485	U62	3200001403	IC-LIN,ICS501M SOI	
486	U63	3202001478	IC-TTL,SN74LVC541ADW SOI	
487	U64	3202001014	IC-TTL,SN74HC74D SOP	
488	U66	3202001508	IC-TTL,74LCX126MX SOI	
489	U67	3202001280	IC-TTL,TC74HC14AFN SOP	
490	U68	3200001524	IC-LIN,KIA7027AP SOT	
491	U71	3200001096	IC-LIN,CXA1875AM SOP	
492	U72	ULM324D	IC,OP AMP LM324D	
493	U75	3200001529	IC-LIN,MM74HCT08 SOP	
494	U801	3114000127	FET,SI4435DY SMD	
495	U802	3114000127	FET,SI4435DY SMD	
496	U803	3114000127	FET,SI4435DY SMD	
497	U804	3200001392	IC-LIN,RC1117-3.3 SOT	
498	U805	3200001392	IC-LIN,RC1117-3.3 SOT	
499	U806	3200001392	IC-LIN,RC1117-3.3 SOT	
500	U807	3114000127	FET,SI4435DY SMD	
501	U808	3200001392	IC-LIN,RC1117-3.3 SOT	
502	U809	3200001392	IC-LIN,RC1117-3.3 SOT	
503	U810	3200001462	IC-LIN,RC1117ST-2.5 SOT	
504	U91	3203000745	IC-MEMO,24LC211/SN SOI	
505	U92	3200001170	IC-LIN,HEF4052BT(D) SOI	
506	U93	3203000745	IC-MEMO,24LC211/SN SOI	
507	U94	3202001301	IC-TTL,SN74LVC08AD SOI	
508	VGA	3720101777	CONN-M,SMW200-13P	
509	VIDEO	3720101387	CONN-M,SMW200-05P	
510	X3	3530200613	VIB-QUARTZ,SMD 24.576MHZ	
511	X6	3530200614	VIB-QUARTZ,SMD 20.48MHZ 2	
512	X7	3530200505	VIB-QUARTZ,SX-1 SMD 14.31	

Miscellaneous

NUM.	LOCATION	PART NUMBER	DESCRIPTION	REMARK
1		E420453191A	AC INLET ASSY,L80A	
2		B4209501301C	BAG PE,MANUAL T0.03	
3		6243028300	BAG,PE(ST) CLEAR 14"/15"A	
4		6105189700	BASE METAL,L80A	
5		6201290400	BASE,STAND FRONT,L80A	
6		6201290500	BASE,STAND REAR,L80A	
7		6110260900	BKT HINGE,L80A	
8		630118860001	BOX CTN,L80A	
9		6301168200	BOX INNER,HLM-1400	
10		6215235200	CAP HINGE,L80A	
11		3758000200	CBL-PWR,MW WALL 1.8MT EUR	
12		3758500425	CBL-SGN,7PAI 1.5M 2C MW S	
13		375850041601	CBL-SGN,AUDIO INPUT CABLE	
14		375850044701	CBL-SGN,DVI WITH SCREW(2)	
15		3758500449	CBL-SGN,DVI-D 2CORE M TO	
16		375850041101	CBL-SGN,USB A+B CABLE 153	
17		375850044801	CBL-SGN,VIDEO WITH SCREW(	
18		301070076901	CONN B/D ASSY,L80A	
19		3725005174	CONN-A,INVERTER CABLE L80	
20		3725005175	CONN-A,LCD CABLE L80A L80	
21		3725005173	CONN-A,LVDS CABLE L80A L8	
22		372110108601	CONN-F,USB A -TYPE 4	
23		3721101087	CONN-F,USB B-TYPE 2	
24		3720101773	CONN-M,AC INLET SOLDER	
25		301070076801	CONTROL B/D OSD,L80A,OSD	
26		6201293200	COVER FRONT ASSY L80A HIQ	
27		6201290200	COVER FRONT,L80A	
28		6201290300	COVER REAR,L80A	
29		6253111900	CUSHION "L",L80A	
30		6253112000	CUSHION "R",L80A	
31		3114000127	FET,SI4435DY SMD	
32		6101210500	FRAME HINGE,L80A	
33		6101210600	FRAME MAIN,L80A	
34		6120049900	FRAME SPRING,L80A	
35		B4210326901	FRAMI MAIN ASSY,L80A	
36		6128010119	GASKET EM,L80A(12X0.5X260	
37		6128010118	GASKET EMI,L80A(12X1.5X26	
38		6128010115	GASKET EMI,L80A(12X6X400)	
39		6124037200	HEAT SINK OSD,L80A	
40		6115021500	HINGE,L80A	
41		6223066900	HOLDER,HANDLE BOTTOM	
42		6223066800	HOLDER,HANDLE TOP	
43		3200001521	IC-LIN,AU9254 SOP	
44		3200001522	IC-LIN,KIA6240K SIP	
45		3200001279	IC-LIN,MIC2526-2BM SOI	
46		B4210326801	KIT COVER,L80A	

NUM.	LOCATION	PART NUMBER	DESCRIPTION	REMARK
47		B4204665100	KIT LABEL,L80A/99 HIE	
48		6215235100	KNOB OSD,L80A	
49		631633290702	LABEL BACK,L80A EXP	
50		B4204513264B	LABEL,B/CODE 82KHZ(DIC547	
51		B4210326601	LCD MEC.ASSY,L80A	
52		3330500223	LCD,HT18E22-200	
53		E4205016401	MAIN ASSY,L80A EXP	
54		6101217900	MODULE FRAME ASSY,L80A	
55		B4210326501	PCAKING ASSY,L80A	
56		E4208418601	PCBA MA(A1*),L80A	
57		E4208518601	PCBA MA(I1*),L80A	
58		E4208618601	PCBA MA(T1*),L80A	
59		3041001031	PCB-DOUBLE,HLM-L800A/HMO	
60		6130020304	PEM,L80A (8X13.3)SUM	
61		3610200090	PWR-LIN-SPPLY,C&C TECH	⚠
62		361020009101	PWR-LIN-SPPLY,INVERTER L8	⚠
63		6261043200	RUBBER FOOT,L80A	
64		M11144010012	SCREW,BIN(+) 4*10 MSZPC	
65		M11144010012	SCREW,BIN(+) 4*10 MSZPC	
66		M11143006012	SCREW,BIN(+) M3*6 MSZPC	
67		M17744006012	SCREW,BIN(+) M4*6 MSZPC	
68		5004000192	SCR-TT,BIN + MC 3*6	
69		5004000190	SCR-TT,BIN + MC 3*8	
70		5004000190	SCR-TT,BIN + MC 3*8	
71		5004000187	SCR-TT2,BIN(+) MC 4*14	
72		6242027802	SHEET PROTECT TAPE,L80A	
73		632703520101	SHEET,INSTALLING GUIDE,V*	
74		6120046400	SHLD-CASE FRAME,L80A	
75		6120046500	SHLD-CASE INVERTER,L80A	
76		6120037202	SHLD-PL EMI TAPE,L80A	
77		3550100103	SPEAKER ASSY,L80A	
78		B4210326701	STAND ASSY,L80A	
79		6316345101	STICKER CABINET,TCO '99	
80		6320230210	USER-GUIDE,CD IQT EXP ALL	

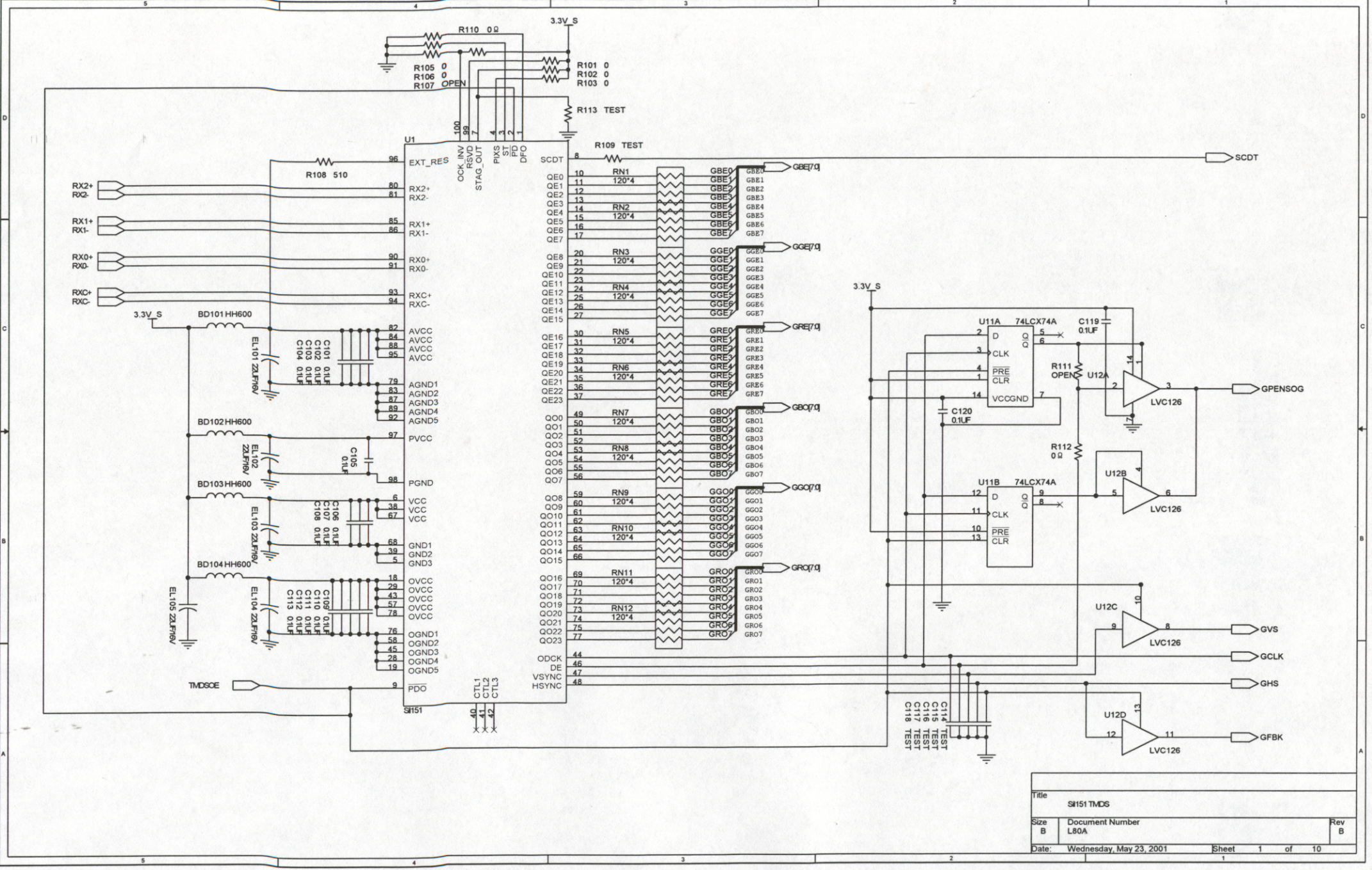

Title	Si151 TMDS	
Size B	Document Number L80A	Rev B
Date: Wednesday, May 23, 2001	Sheet 1 of 10	

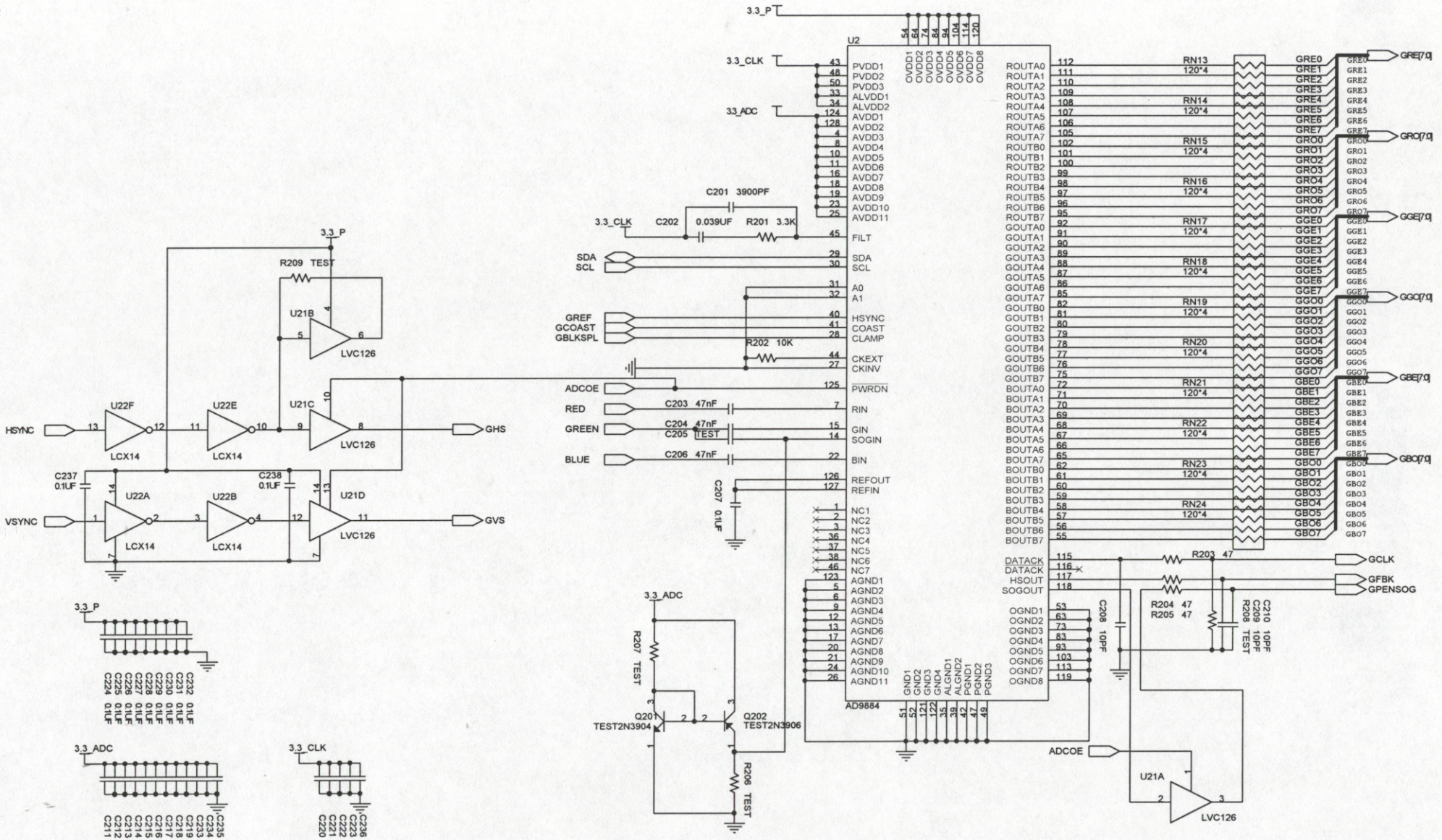
3.3_P
3.3_CLK
33_ADC
U2
AD9884
PVDD1
PVDD2
PVDD3
ALVDD1
ALVDD2
AVDD1
AVDD2
AVDD3
AVDD4
AVDD5
AVDD6
AVDD7
AVDD8
AVDD9
AVDD10
AVDD11
FILT
SDA
SCL
A0
A1
HSYNC
COAST
CLAMP
CKEXT
CKINV
PWRDN
RIN
GIN
SOGIN
BIN
REFOUT
REFIN
NC1
NC2
NC3
NC4
NC5
NC6
NC7
AGND1
AGND2
AGND3
AGND4
AGND5
AGND6
AGND7
AGND8
AGND9
AGND10
AGND11
OVDD1
OVDD2
OVDD3
OVDD4
OVDD5
OVDD6
OVDD7
OVDD8
GND1
GND2
GND3
GND4
ALGND1
ALGND2
PGND1
PGND2
PGND3
ROUTA0
ROUTA1
ROUTA2
ROUTA3
ROUTA4
ROUTA5
ROUTA6
ROUTA7
ROUTB0
ROUTB1
ROUTB2
ROUTB3
ROUTB4
ROUTB5
ROUTB6
ROUTB7
GOUTA0
GOUTA1
GOUTA2
GOUTA3
GOUTA4
GOUTA5
GOUTA6
GOUTA7
GOUTB0
GOUTB1
GOUTB2
GOUTB3
GOUTB4
GOUTB5
GOUTB6
GOUTB7
BOUTA0
BOUTA1
BOUTA2
BOUTA3
BOUTA4
BOUTA5
BOUTA6
BOUTA7
BOUTB0
BOUTB1
BOUTB2
BOUTB3
BOUTB4
BOUTB5
BOUTB6
BOUTB7
DATACK
DATACK
HSOUT
SOGOUT
OGND1
OGND2
OGND3
OGND4
OGND5
OGND6
OGND7
OGND8
C201 3900PF
C202 0.039UF
R201 3.3K
R202 10K
C203 47nF
C204 47nF
C205 TEST
C206 47nF
C207 0.1UF
C208 10PF
C209 10PF
C210 10PF
R203 47
R204 47
R205 47
R208 TEST
R209 TEST
RN13 120*4
RN14 120*4
RN15 120*4
RN16 120*4
RN17 120*4
RN18 120*4
RN19 120*4
RN20 120*4
RN21 120*4
RN22 120*4
RN23 120*4
RN24 120*4
GRE0
GRE1
GRE2
GRE3
GRE4
GRE5
GRE6
GRE7
GRO0
GRO1
GRO2
GRO3
GRO4
GRO5
GRO6
GRO7
GGE0
GGE1
GGE2
GGE3
GGE4
GGE5
GGE6
GGE7
GGO0
GGO1
GGO2
GGO3
GGO4
GGO5
GGO6
GGO7
GBE0
GBE1
GBE2
GBE3
GBE4
GBE5
GBE6
GBE7
GBO0
GBO1
GBO2
GBO3
GBO4
GBO5
GBO6
GBO7
GRE[7:0]
GRO[7:0]
GGE[7:0]
GGO[7:0]
GBE[7:0]
GBO[7:0]
GCLK
GFBK
GPENSOG
ADCOE
GREF
GCOAST
GBLKSPL
RED
GREEN
BLUE
U21A
U21B
U21C
U21D
U22A
U22B
U22E
U22F
LVC126
LCX14
HSYNC
VSYNC
GHS
GVS
C237 0.1UF
C238 0.1UF
C211 0.1UF
C212 0.1UF
C213 0.1UF
C214 0.1UF
C215 0.1UF
C216 0.1UF
C217 0.1UF
C218 0.1UF
C219 0.1UF
C220 0.1UF
C221 0.1UF
C222 0.1UF
C223 0.1UF
C224 0.1UF
C225 0.1UF
C226 0.1UF
C227 0.1UF
C228 0.1UF
C229 0.1UF
C230 0.1UF
C231 0.1UF
C232 0.1UF
C233 0.1UF
C234 0.1UF
C235 0.1UF
C236 0.1UF
3.3_ADC
3.3_CLK
R206 TEST
R207 TEST
Q201 TEST2N3904
Q202 TEST2N3906
Title
AD9884 ADC
Size B
Document Number L80A
Rev B
Date: Wednesday, May 23, 2001
Sheet 2 of 10

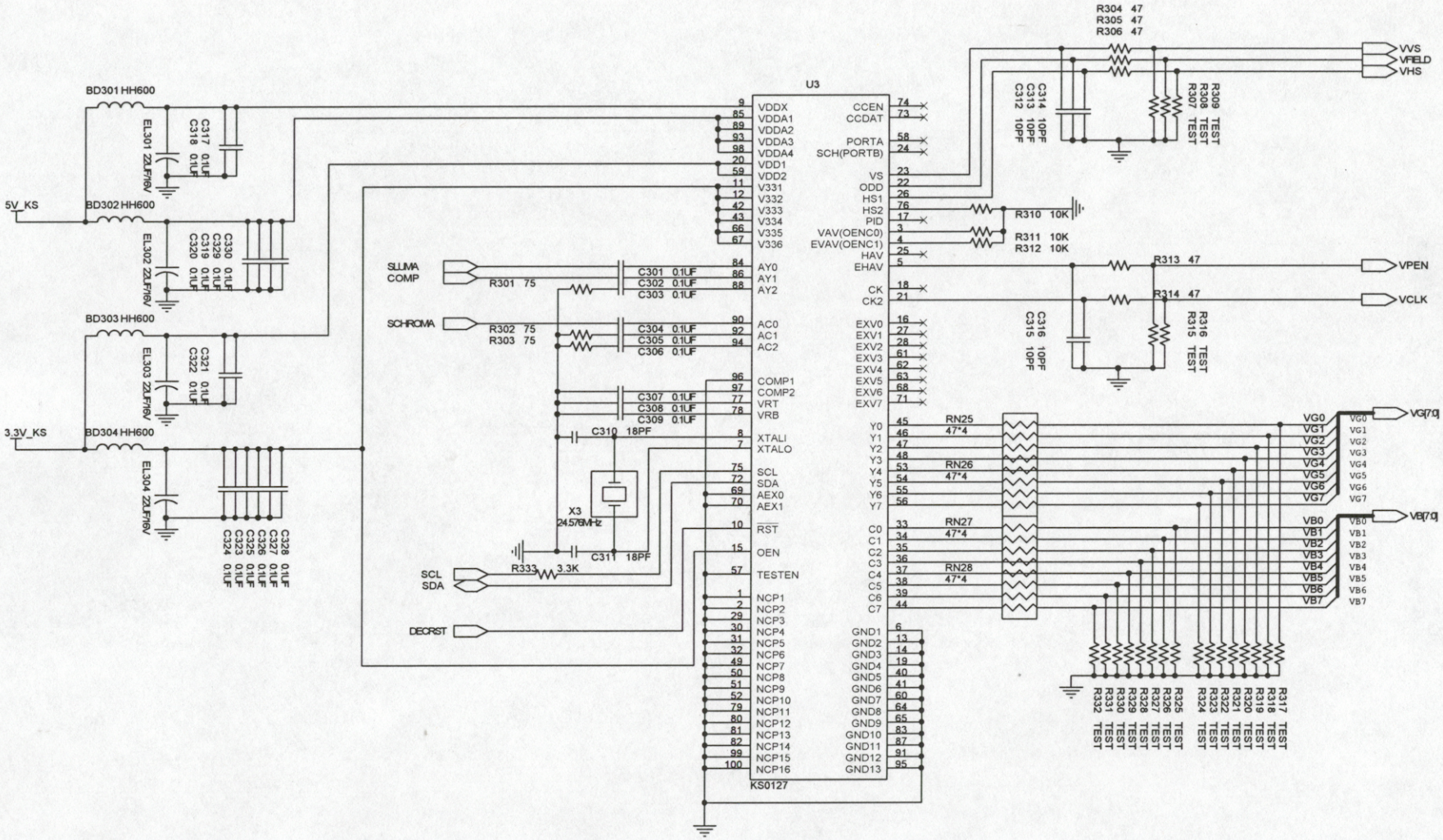

Title	KS0127 DECODER	
Size B	Document Number L80A	Rev B
Date: Wednesday, May 23, 2001	Sheet 3 of 10	

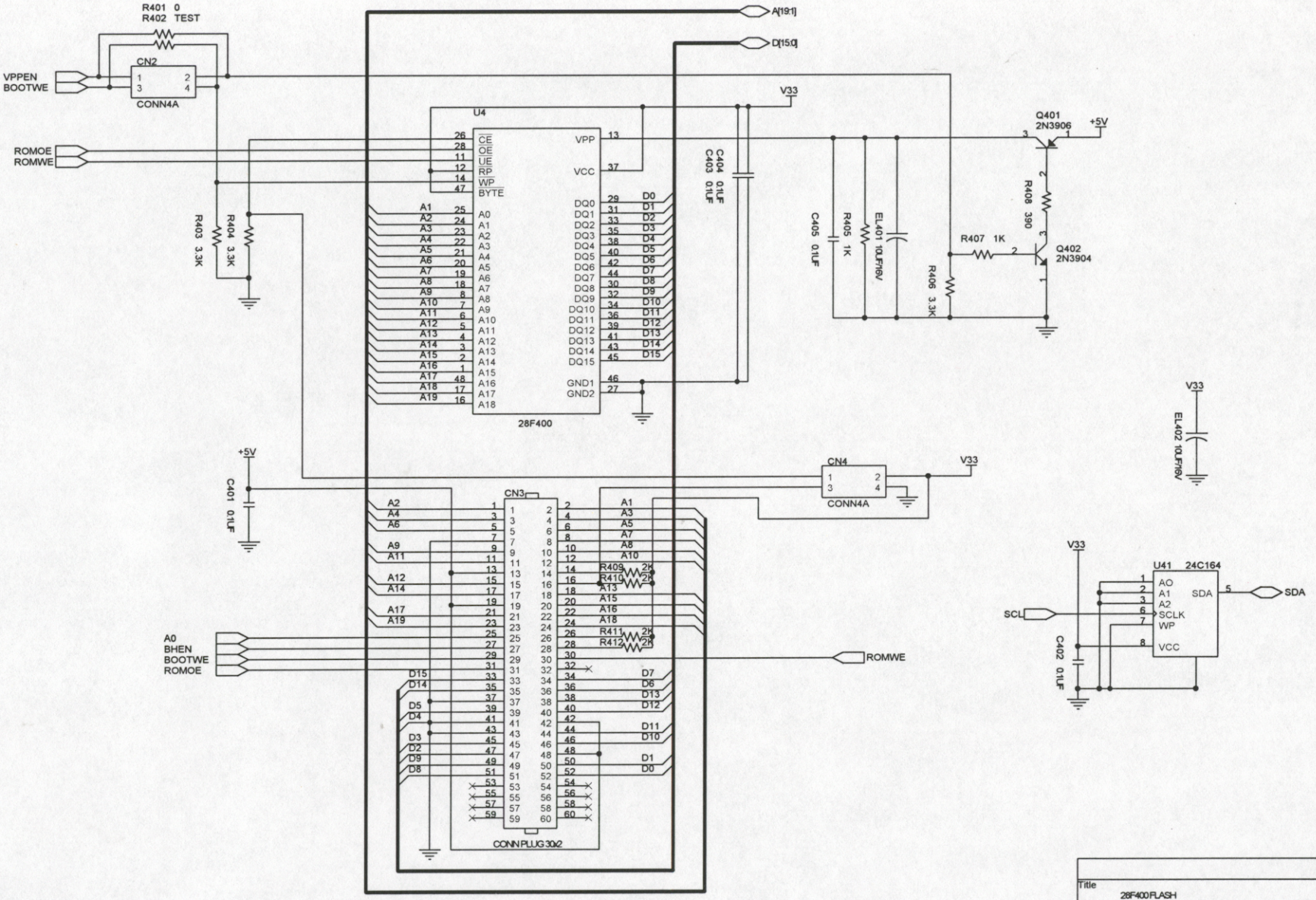

Title	28F400FLASH	
Size B	Document Number L80A	Rev B
Date: Wednesday, May 23, 2001	Sheet 4 of 10	

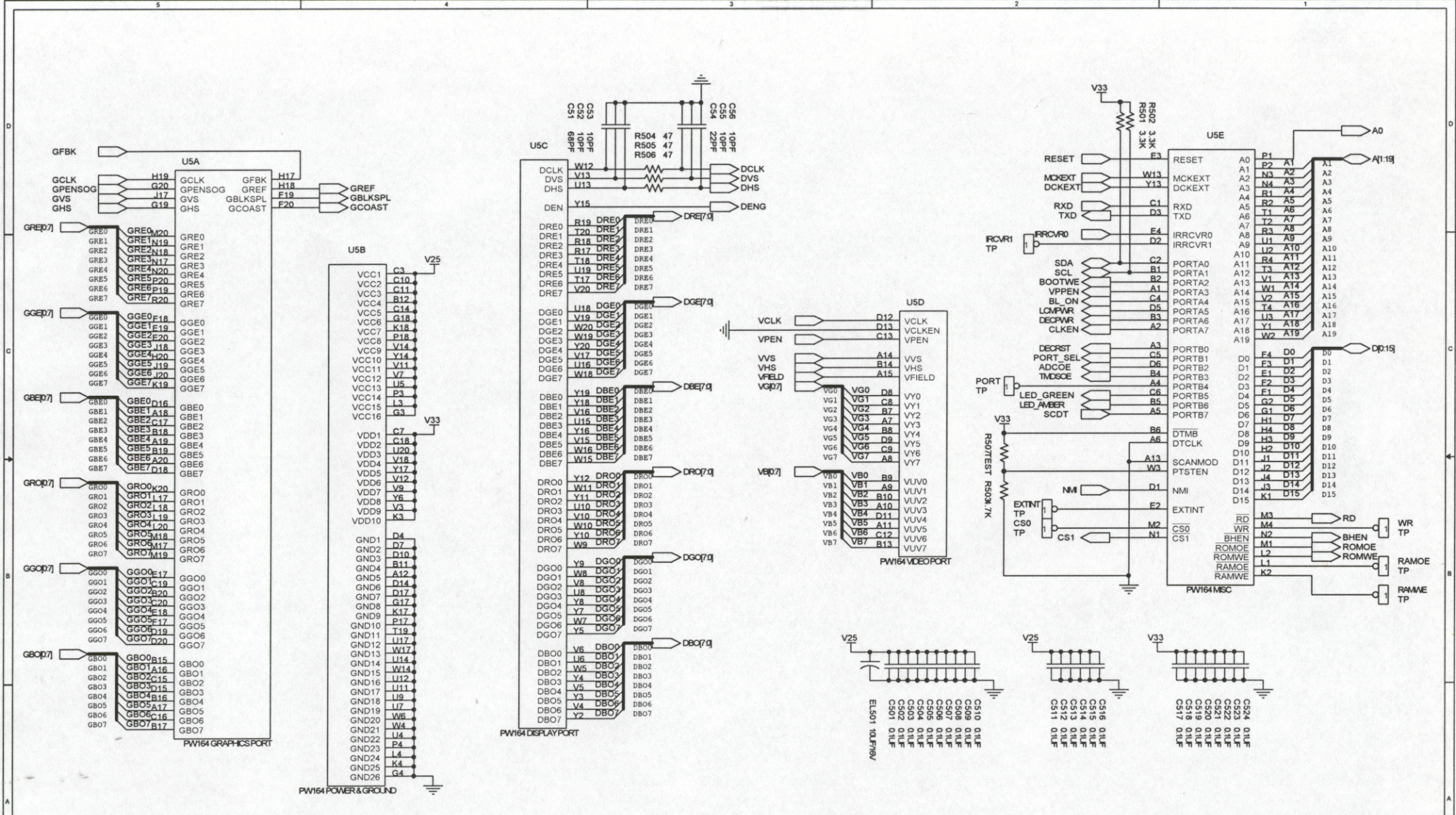

Title	PW164	
Size B	Document Number L80A	Rev B
Date: Wednesday, May 23, 2001	Sheet 5 of 10	

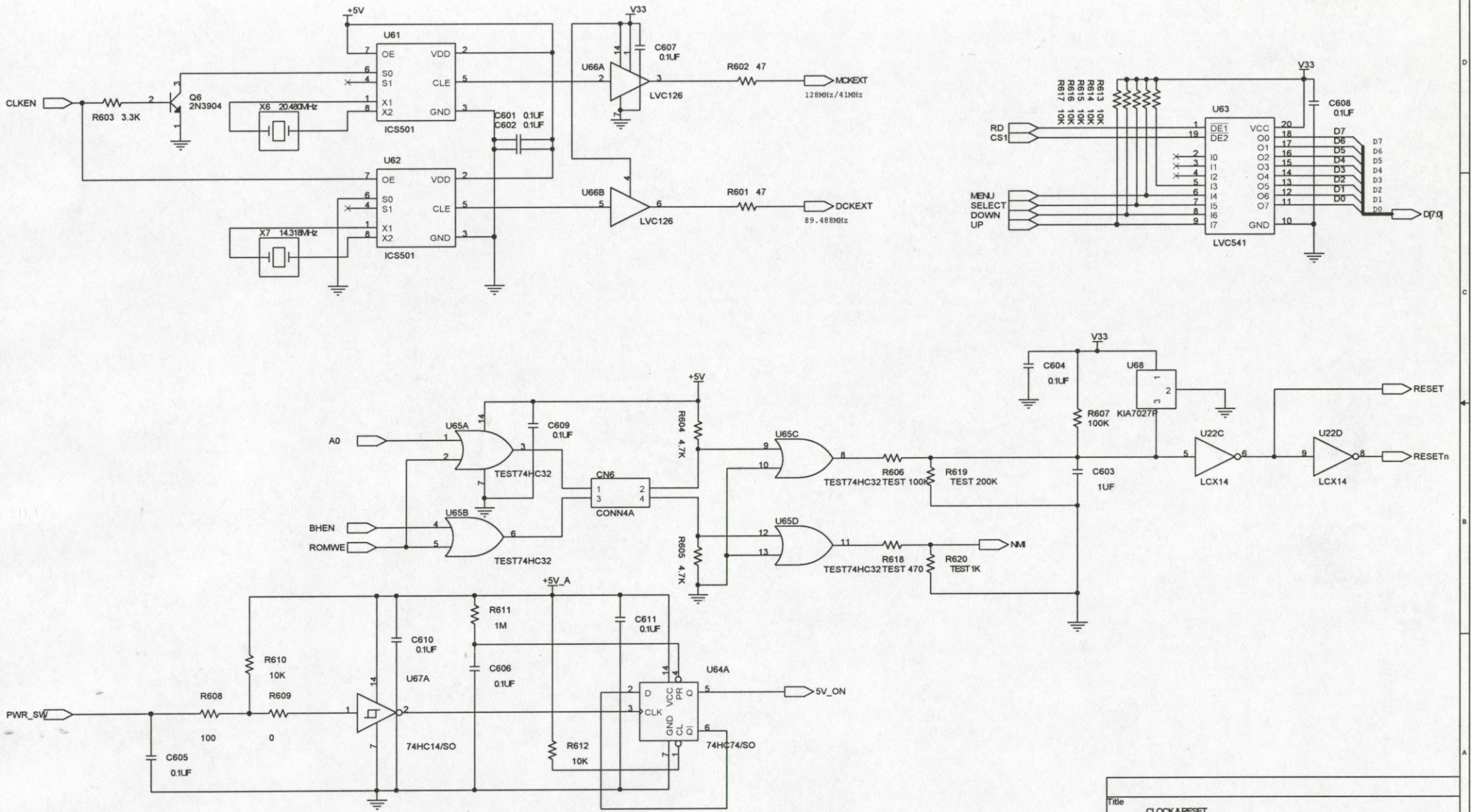

Title	CLOCK & RESET	
Size B	Document Number L80A	Rev B
Date: Wednesday, May 23, 2001	Sheet 6 of 10	

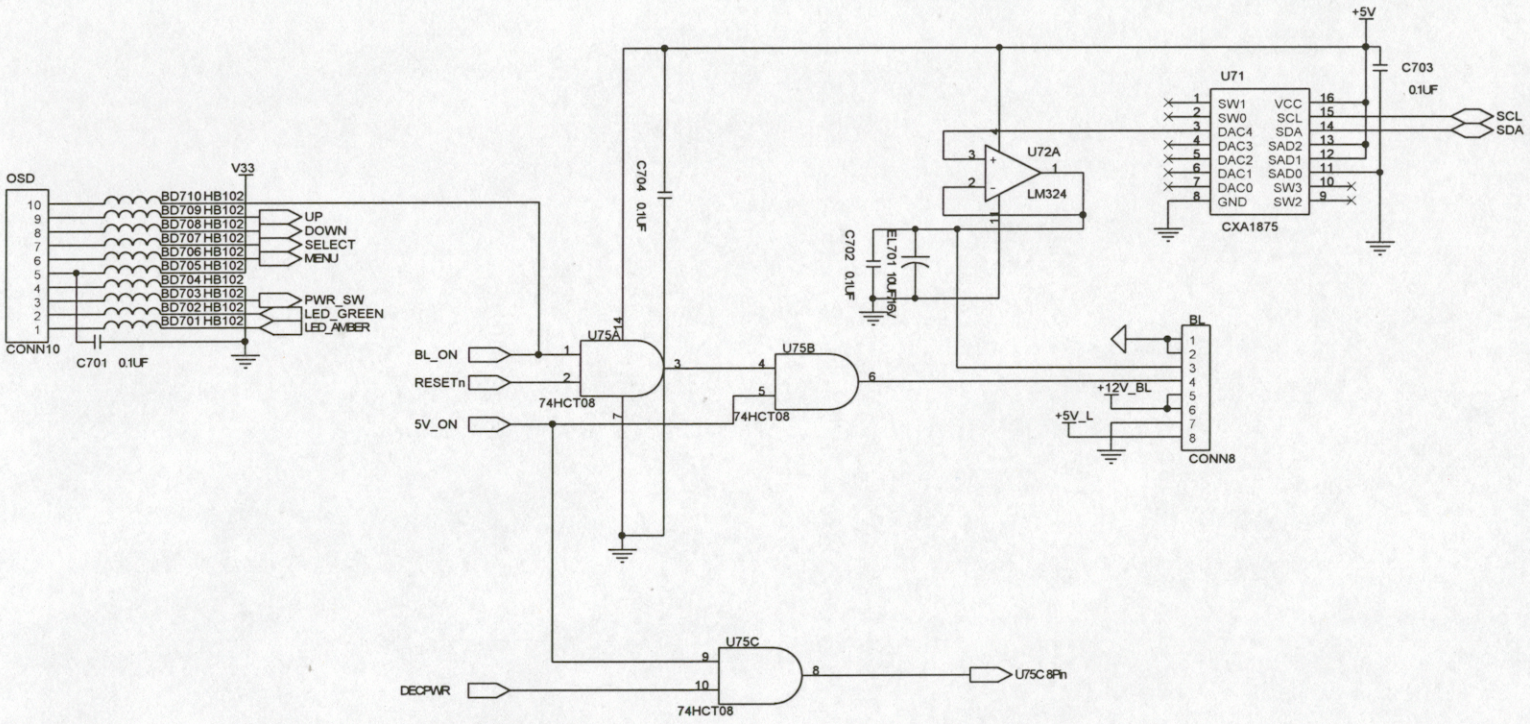

Title	OSD & BACKLIGHT	
Size B	Document Number L80A	Rev B
Date: Wednesday, May 23, 2001	Sheet 7 of 10	

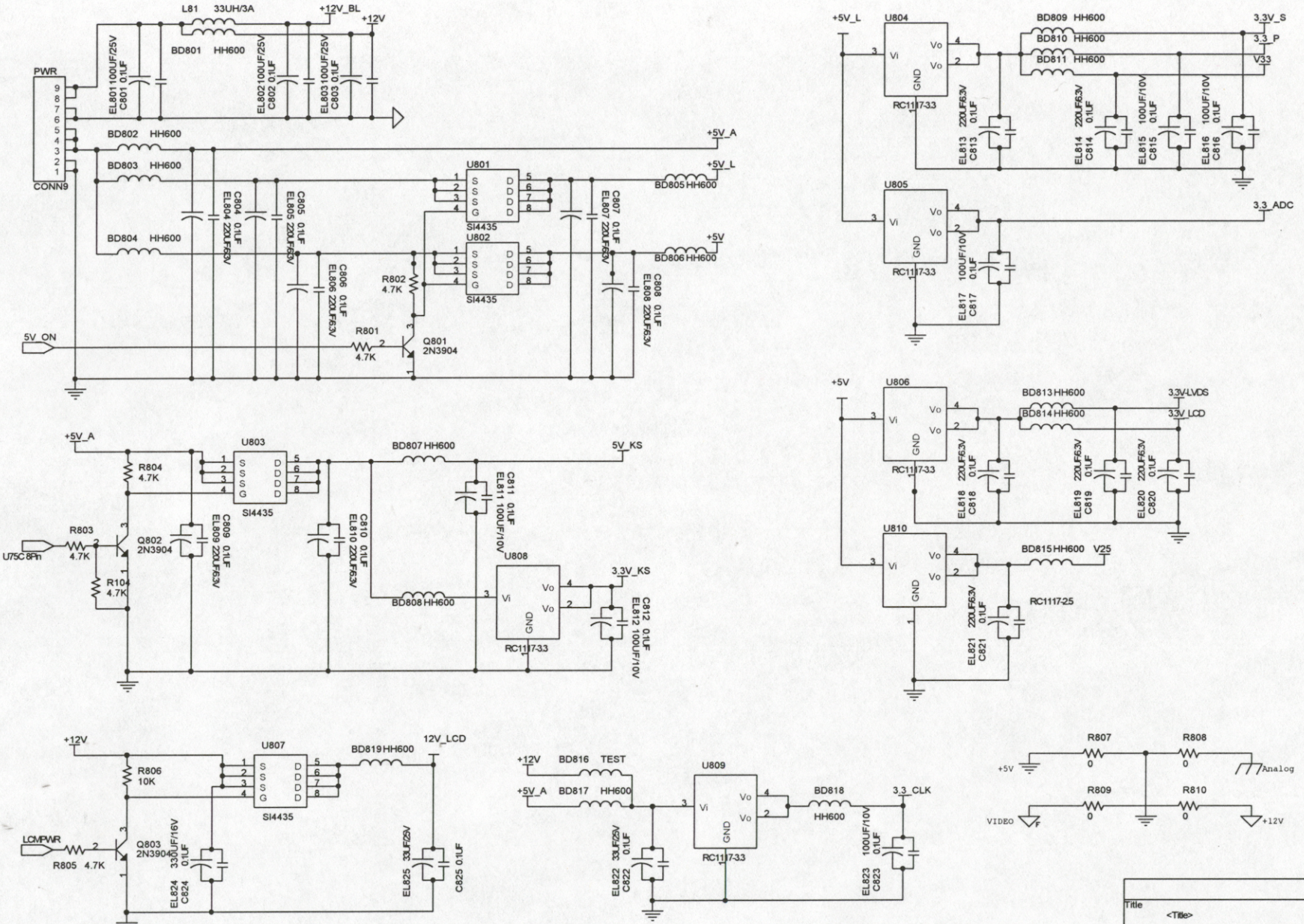
L81 33UH/3A
+12V_BL
+12V
BD801 HH600
EL801 100UF/25V C801 0.1UF
EL802 100UF/25V C802 0.1UF
EL803 100UF/25V C803 0.1UF
PWR
CONN9
BD802 HH600
+5V_A
BD803 HH600
+5V_L
BD804 HH600
+5V
U801
U802
SI4435
BD805 HH600
BD806 HH600
C804 0.1UF EL804 220UF/63V
C805 0.1UF EL805 220UF/63V
C806 0.1UF EL806 220UF/63V
C807 0.1UF EL807 220UF/63V
C808 0.1UF EL808 220UF/63V
R802 4.7K
R801 4.7K
Q801 2N3904
5V_ON
+5V_L
U804
BD809 HH600
BD810 HH600
BD811 HH600
3.3V_S
3.3_P
V33
RC1117-3.3
EL813 C813 220UF/63V 0.1UF
EL814 C814 220UF/63V 0.1UF
EL815 C815 100UF/10V 0.1UF
EL816 C816 100UF/10V 0.1UF
U805
3.3_ADC
EL817 C817 100UF/10V 0.1UF
+5V_A
U803
BD807 HH600
5V_KS
R804 4.7K
R803 4.7K
Q802 2N3904
R104 4.7K
U75C8Pin
C809 0.1UF EL809 220UF/63V
C810 0.1UF EL810 220UF/63V
C811 0.1UF EL811 100UF/10V
U808
BD808 HH600
3.3V_KS
C812 0.1UF EL812 100UF/10V
RC1117-3.3
+5V
U806
BD813 HH600
BD814 HH600
3.3V-LVDS
3.3V_LCD
EL818 C818 220UF/63V 0.1UF
EL819 C819 220UF/63V 0.1UF
EL820 C820 220UF/63V 0.1UF
U810
BD815 HH600
V25
RC1117-2.5
EL821 C821 220UF/63V 0.1UF
+12V
U807
BD819 HH600
12V_LCD
R806 10K
LCMPWR
R805 4.7K
Q803 2N3904
EL824 C824 330UF/16V 0.1UF
EL825 33UF/25V
C825 0.1UF
+12V
BD816 TEST
+5V_A
BD817 HH600
U809
BD818
HH600
3.3_CLK
EL822 C822 33UF/25V 0.1UF
EL823 C823 100UF/10V 0.1UF
R807 0
R808 0
Analog
+5V
R809 0
R810 0
VIDEO
+12V
Title
<Title>
Size B
Document Number L80A
Rev B
Date: Wednesday, May 23, 2001
Sheet 8 of 10

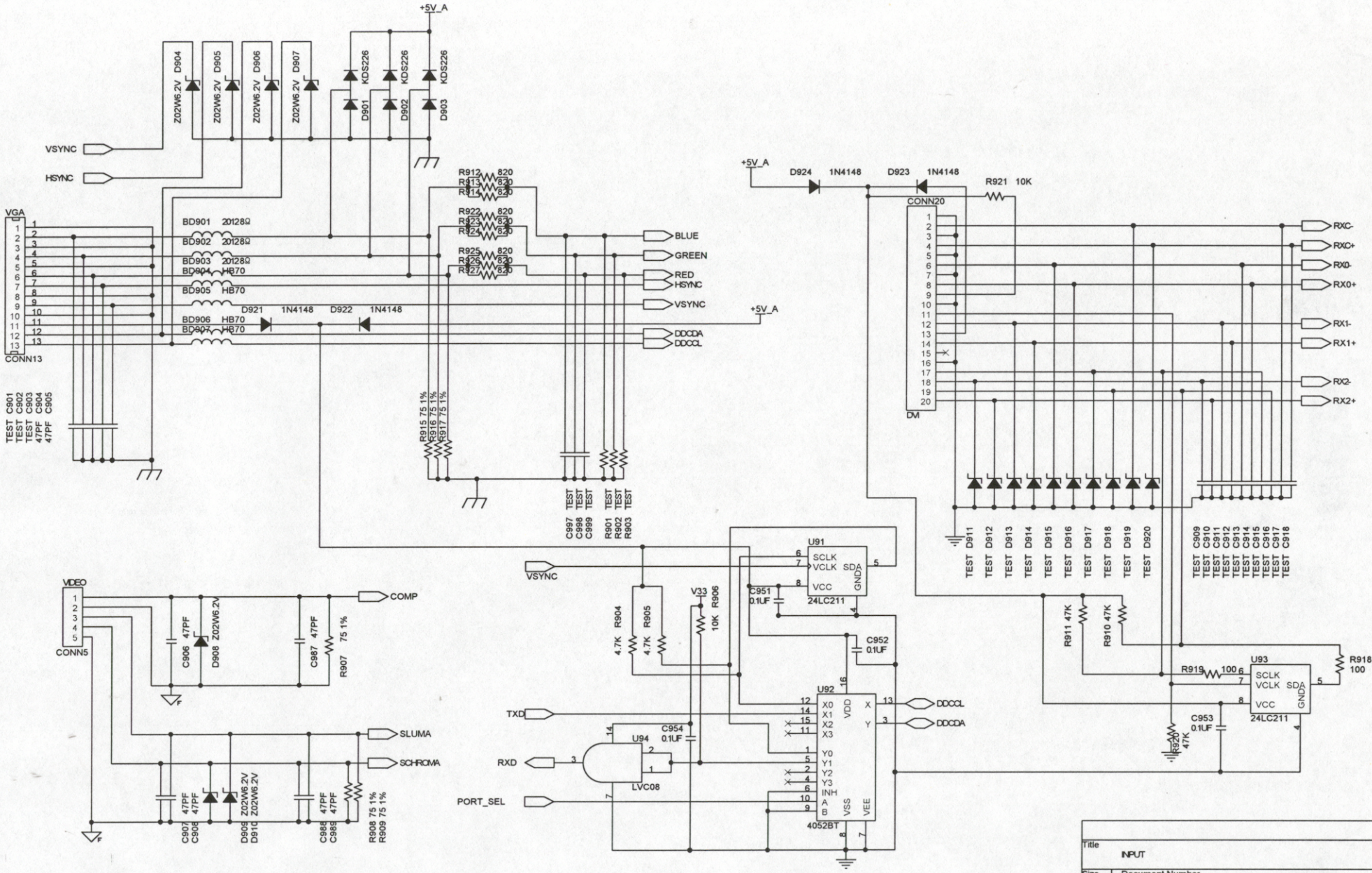

Title	INPUT	
Size B	Document Number L80A	Rev B
Date: Wednesday, May 23, 2001	Sheet 9 of 10	

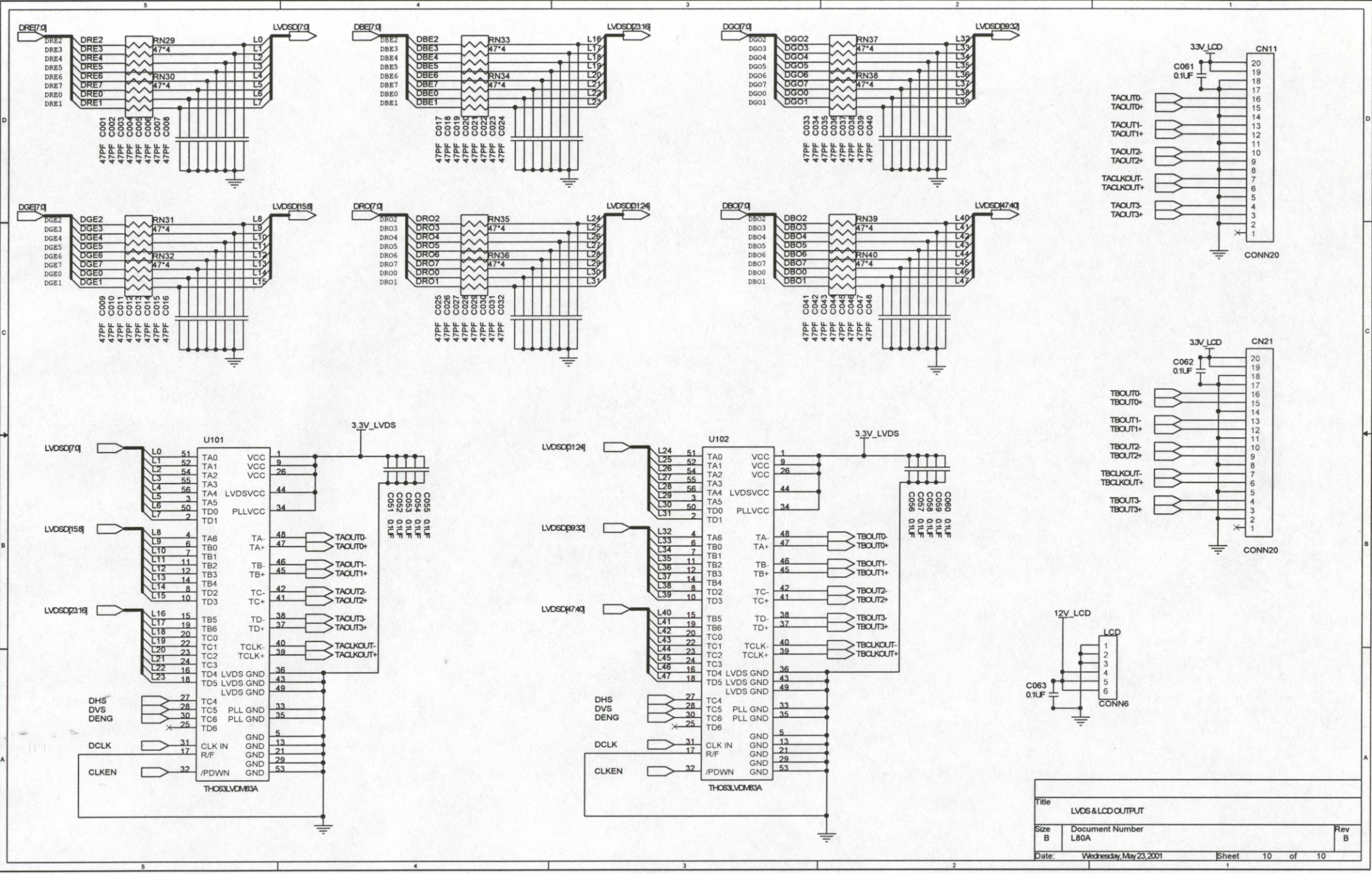
DRE[7:0]
DRE2
DRE3
DRE4
DRE5
DRE6
DRE7
DRE0
DRE1
RN29
RN30
47*4
L0
L1
L2
L3
L4
L5
L6
L7
LVDSD[7:0]
C001 C002 C003 C004 C005 C006 C007 C008
47PF
DBE[7:0]
DBE2
DBE3
DBE4
DBE5
DBE6
DBE7
DBE0
DBE1
RN33
RN34
L16
L17
L18
L19
L20
L21
L22
L23
LVDSD[23:16]
C017 C018 C019 C020 C021 C022 C023 C024
DGO[7:0]
DGO2
DGO3
DGO4
DGO5
DGO6
DGO7
DGO0
DGO1
RN37
RN38
L32
L33
L34
L35
L36
L37
L38
L39
LVDSD[39:32]
C033 C034 C035 C036 C037 C038 C039 C040
DGE[7:0]
DGE2
DGE3
DGE4
DGE5
DGE6
DGE7
DGE0
DGE1
RN31
RN32
L8
L9
L10
L11
L12
L13
L14
L15
LVDSD[15:8]
C009 C010 C011 C012 C013 C014 C015 C016
DRO[7:0]
DRO2
DRO3
DRO4
DRO5
DRO6
DRO7
DRO0
DRO1
RN35
RN36
L24
L25
L26
L27
L28
L29
L30
L31
LVDSD[31:24]
C025 C026 C027 C028 C029 C030 C031 C032
DBO[7:0]
DBO2
DBO3
DBO4
DBO5
DBO6
DBO7
DBO0
DBO1
RN39
RN40
L40
L41
L42
L43
L44
L45
L46
L47
LVDSD[47:40]
C041 C042 C043 C044 C045 C046 C047 C048
3.3V_LCD
CN11
C061
0.1UF
TAOUT0-
TAOUT0+
TAOUT1-
TAOUT1+
TAOUT2-
TAOUT2+
TACLKOUT-
TACLKOUT+
TAOUT3-
TAOUT3+
CONN20
CN21
C062
TBOUT0-
TBOUT0+
TBOUT1-
TBOUT1+
TBOUT2-
TBOUT2+
TBCLKOUT-
TBCLKOUT+
TBOUT3-
TBOUT3+
12V_LCD
LCD
C063
CONN6
U101
U102
3.3V_LVDS
LVDSD[7:0]
LVDSD[15:8]
LVDSD[23:16]
LVDSD[31:24]
LVDSD[39:32]
LVDSD[47:40]
TA0
TA1
TA2
TA3
TA4
TA5
TD0
TD1
TA6
TB0
TB1
TB2
TB3
TB4
TD2
TD3
TB5
TB6
TC0
TC1
TC2
TC3
TD4
TD5
TC4
TC5
TC6
TD6
CLK IN
R/F
/PDWN
VCC
LVDSVCC
PLLVCC
LVDS GND
PLL GND
GND
TA-
TA+
TB-
TB+
TC-
TC+
TD-
TD+
TCLK-
TCLK+
TAOUT0-
TAOUT0+
TAOUT1-
TAOUT1+
TAOUT2-
TAOUT2+
TAOUT3-
TAOUT3+
TACLKOUT-
TACLKOUT+
TBOUT0-
TBOUT0+
TBOUT1-
TBOUT1+
TBOUT2-
TBOUT2+
TBOUT3-
TBOUT3+
TBCLKOUT-
TBCLKOUT+
DHS
DVS
DENG
DCLK
CLKEN
THC63LVDM83A
Title
LVDS & LCD OUTPUT
Size
B
Document Number
L80A
Rev
B
Date:
Wednesday, May 23, 2001
Sheet
10
of
10

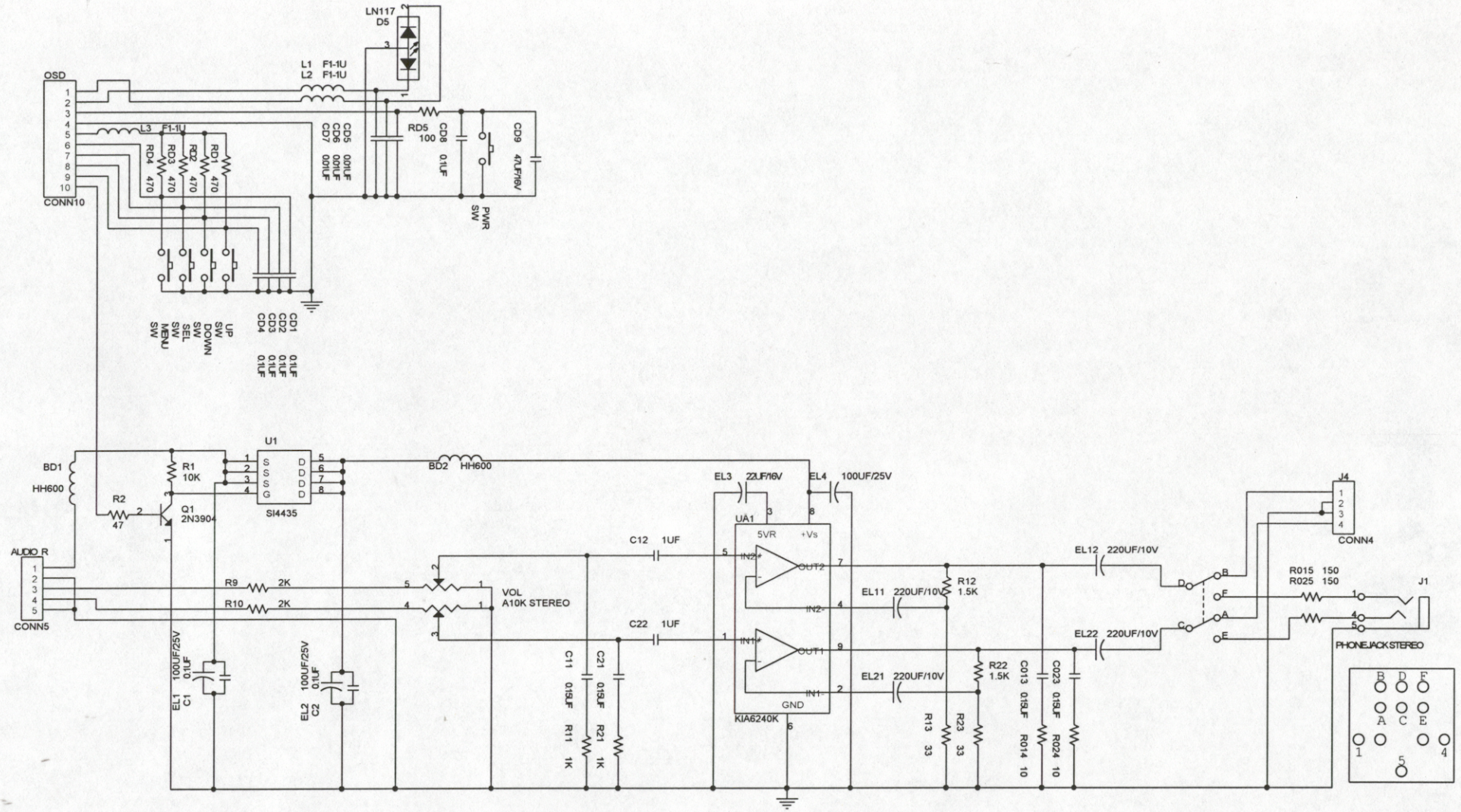

Title	OSD&AUDIO	
Size B	Document Number L80A	Rev B
Date: Thursday, June 28, 2001	Sheet 1 of 1	

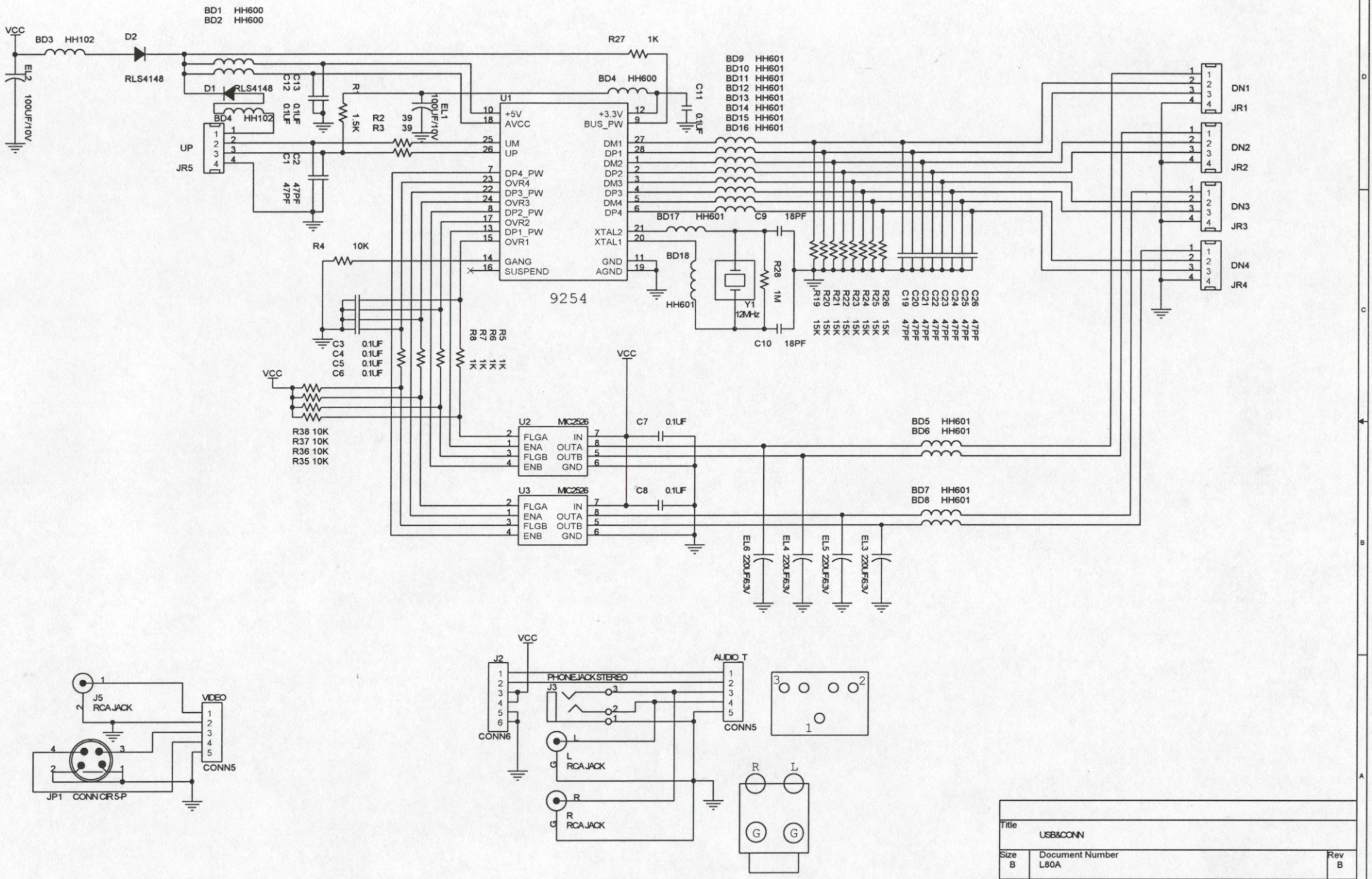

Title	USB&CONN	
Size B	Document Number L80A	Rev B
Date: Thursday, June 28, 2001	Sheet 1 of 1	

Wave Form

Symptom	Check(YES)	Action(NO)
No Power	◈ Check on 5V and 12V at Output Voltage of Power Adaptor	⊙ Change Power Adaptor
Screen is Black with no Back light	◈ Check on 5V at On/Off pin of Inverter ◈ Check on 0V ~ 4V at PWM pin of Inverter ◈ Check on 12V pin of Inverter ◈ Check on H-sync and V-sync ◈ Check on P_clk at pin #125 of Scaler(U6)	⊙ Check on pin #8 of MCU(U8) ⊙ Check on pin #3 of MUC(U19) ⊙ Change Inverter ⊙ Check on pin #1,#5,#4,#8 of U1 ⊙ Check on pin #40 of ADC(U2) ⊙ Check on pin #62, #63 of Scaler(U6)
Bad Video	◈ Display the R.G.B 64 Gray of Pattern ◈ Check on R line If R Video is bad	⊙ Check on RA2, RA4, RA14,RA16 ⊙ Check on pin #7,#15,#22 of ADC(U2) ⊙ Check on Pin #1 of D-sub
Gabarge Display	◈ Check on connecting of FPC Cable	⊙ Change FPC Cable ⊙ Change 80 pin connector of Main B/D ⊙ Change LCD Panel
Mottle screen, V-BAR, H-BAR, White Dot		⊙ Change LCD Panel
No Video	◈ Check on Communication state of MCU (U8,U19) ◈ Check on H/V Sync ◈ Check on P_clk at pin #125 of Scaler(U6) ◈ Check on G-Clock	⊙ Check on pin #28,#29 of MCU(U19) ⊙ Check on pin #1,#5,#4,#8 of U1 ⊙ Check on pin #40 of ADC(U2) ⊙ Check on Pin #62,#63 of Scaler(U6) ⊙ Check on #115 pin of ADC(U2)
H/V Size H/V Position Error	◈ Check on Preset Timing ◈ Check on G-Clock ◈ Check on cold solder at pin of ADC(U2)	⊙ Check on pin #115 of ADC(U2)
LED Green & No Video	◈ Check on connecting of FPC Cable ◈ Check on Backlight	⊙ Reconnect Collectly FPC Cable with Main B/D and Panel
LED Amber & No Video	◈ Check on In/Output of ADC(U2) ◈ Check on H/V Sync	⊙ Check on Pin #7,#15,#22 at Input side of ADC(U2) ⊙ Check on Output data of ADC(U2) ⊙ Check on pin #1,#5,#4,#8 of U1 ⊙ Check on pin #40 of ADC(U2)
separate screen or rocking screen at Preset Mode Timing	◈ Check on Connect Point at PLL Side of ADC (U2)	⊙ Check on Pin #33,#34,#43,#45,#48, #50 of ADC(U2)

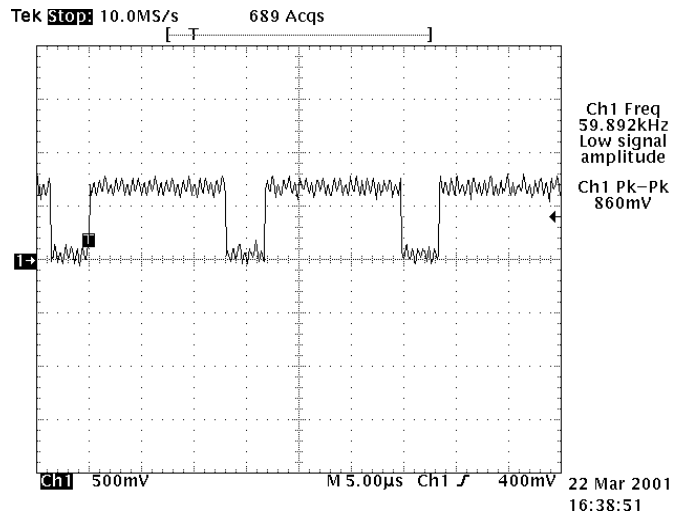

Pin #7 of ADC (U2)

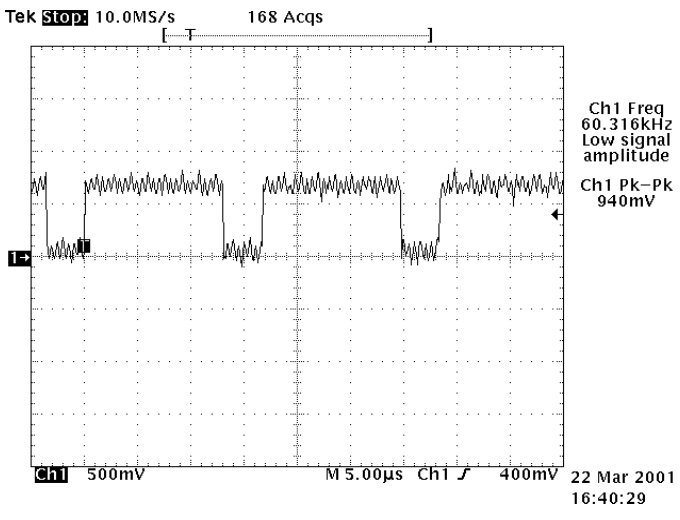

Pin #15 of ADC (U2)

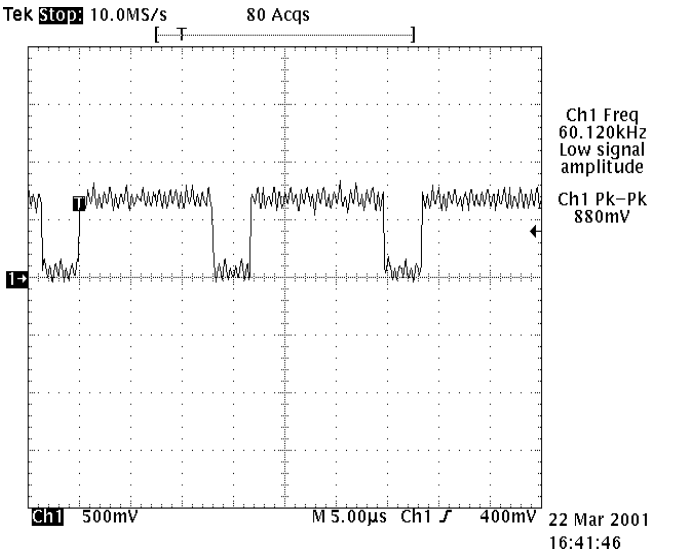

Pin #22 of ADC (U2)

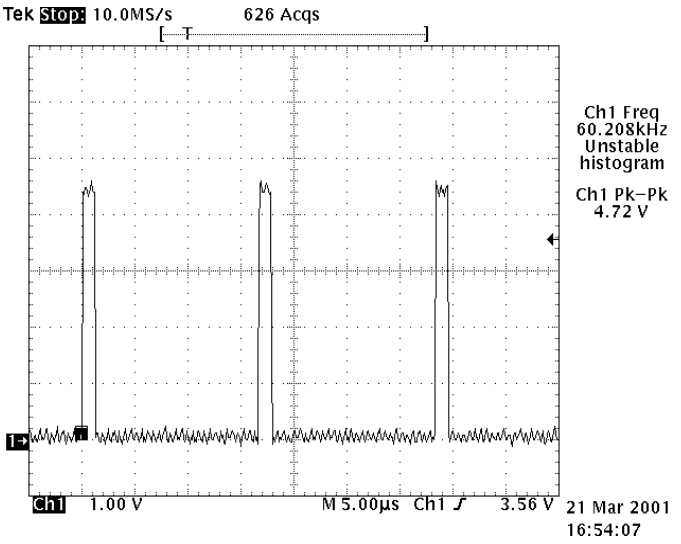

H-sync

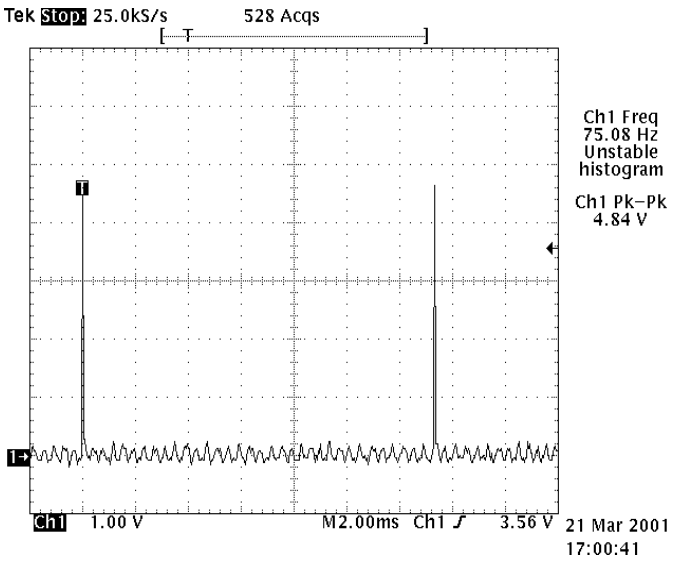

V-sync

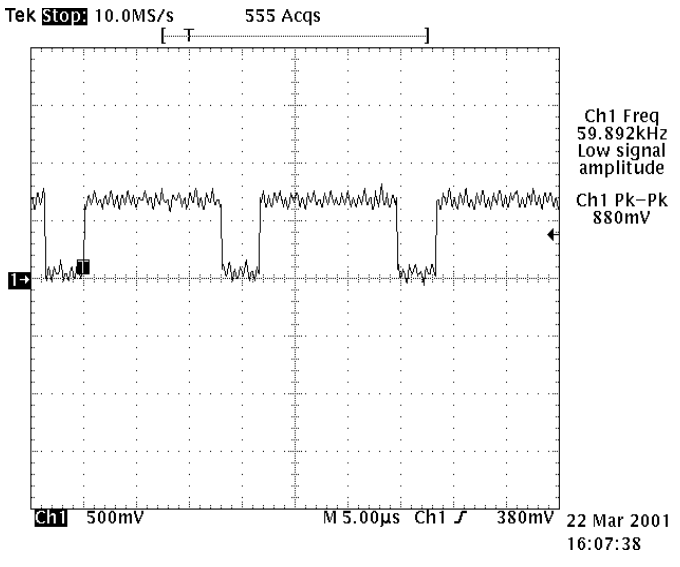

D-sub #1 (Red)

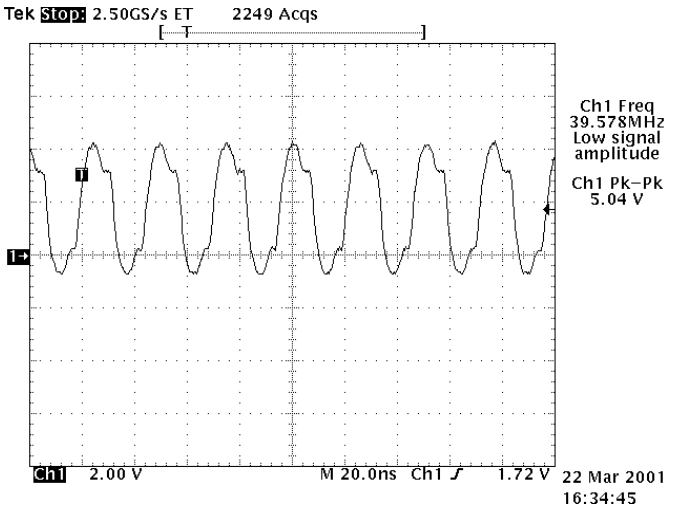

Pin #115 of of DAC (U2) -> G-clock

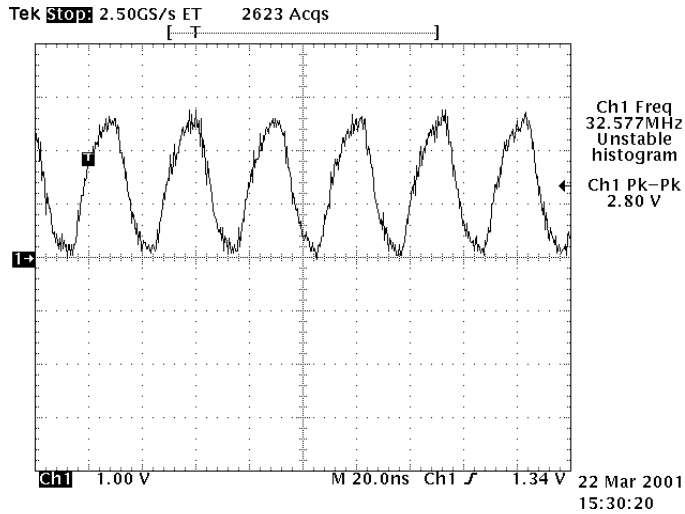

Pin #125 of Scaler(U2) -> P-clock

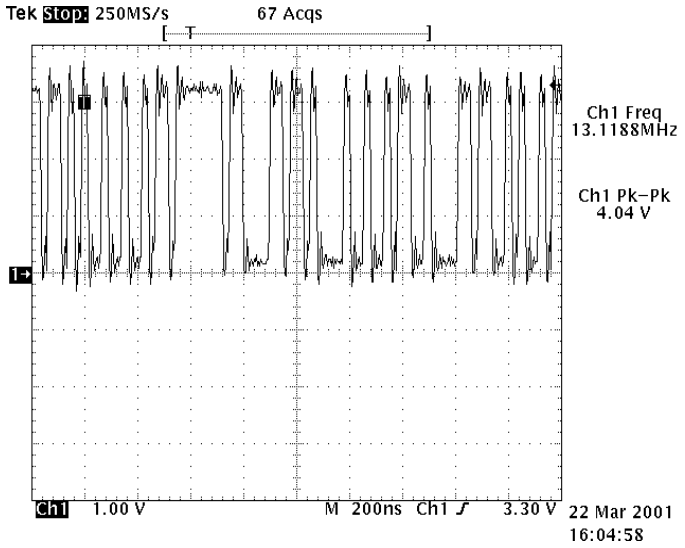

RA4 (R data)

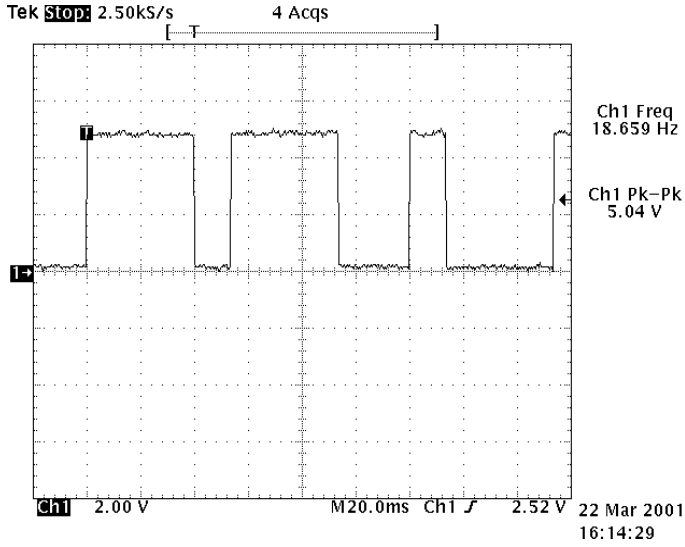

Pin #28 of MCU(U19)

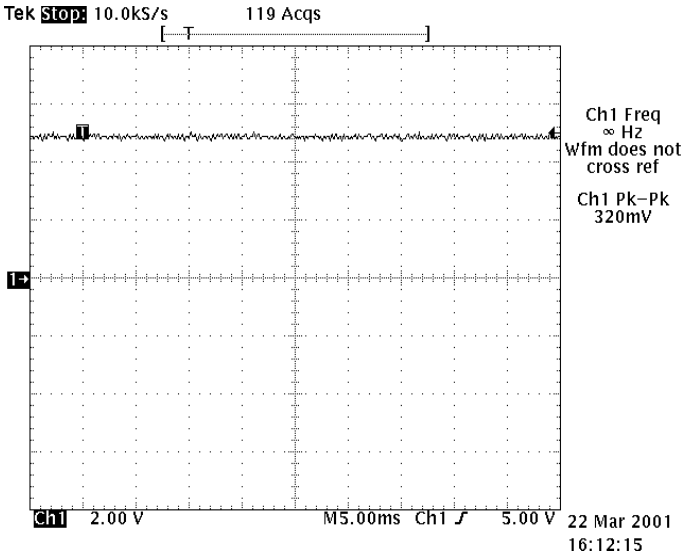

Pin #29 of MCU(U19)

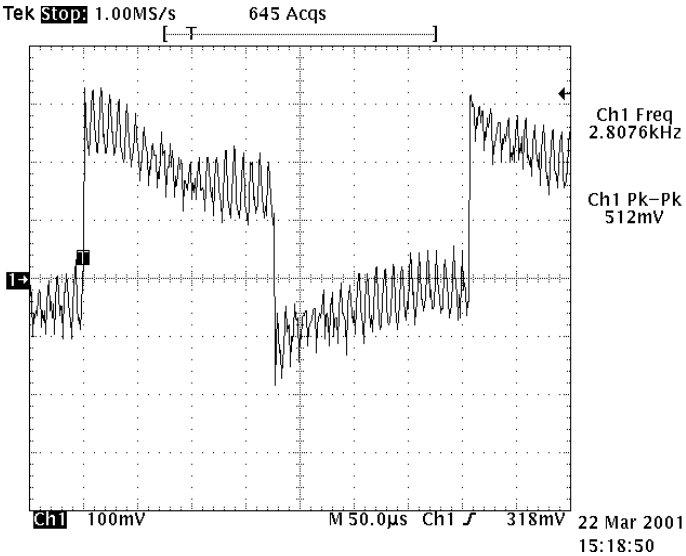

Pin #3 of MCU (U19)

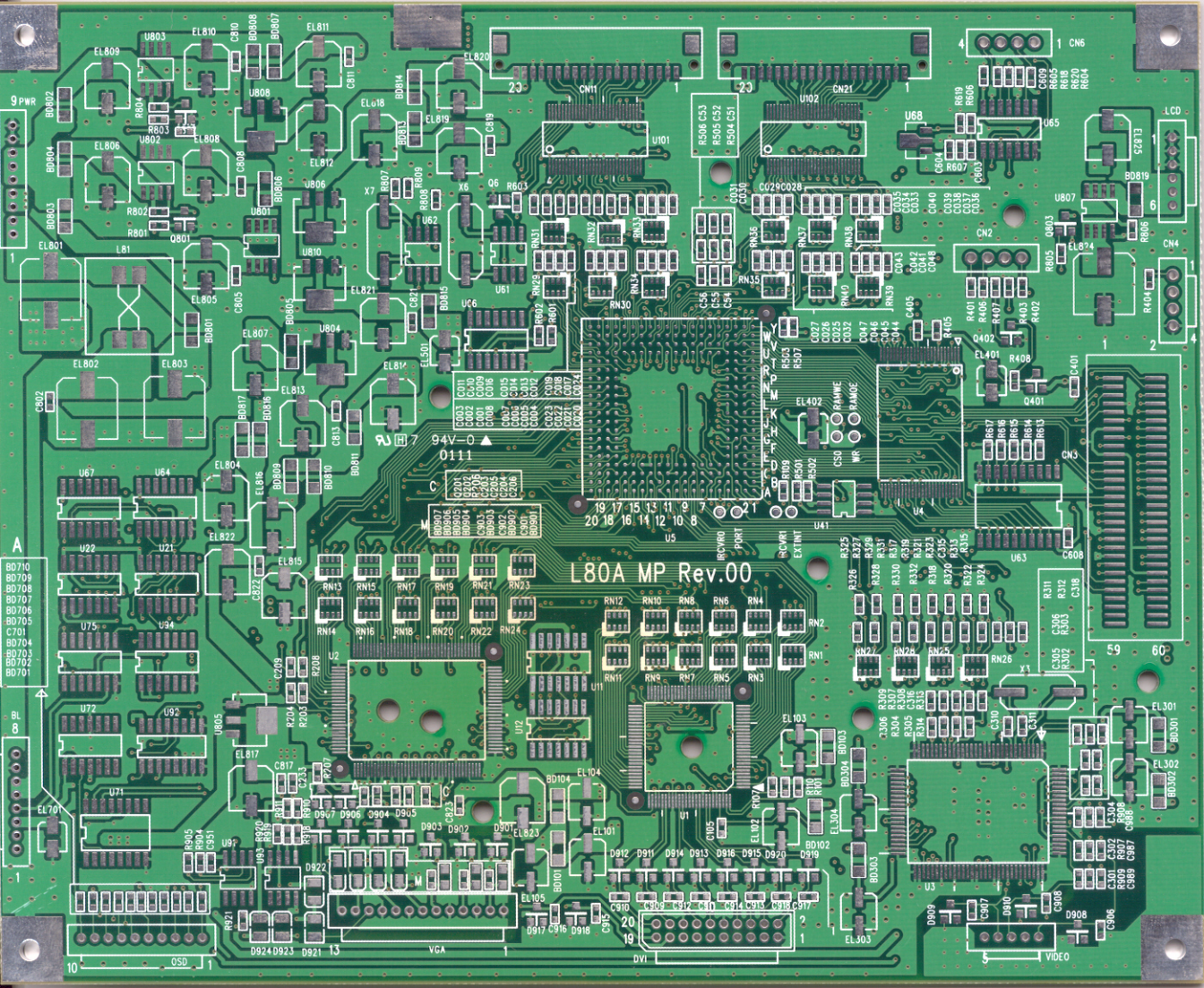
L80A MP Rev.00
94V-0
0111
PWR
LCD
OSD
VGA
DVI
VIDEO
RAMWE
RAMOE
CSO
WR
RCVR0
PORT
RCVR1
EXTINT

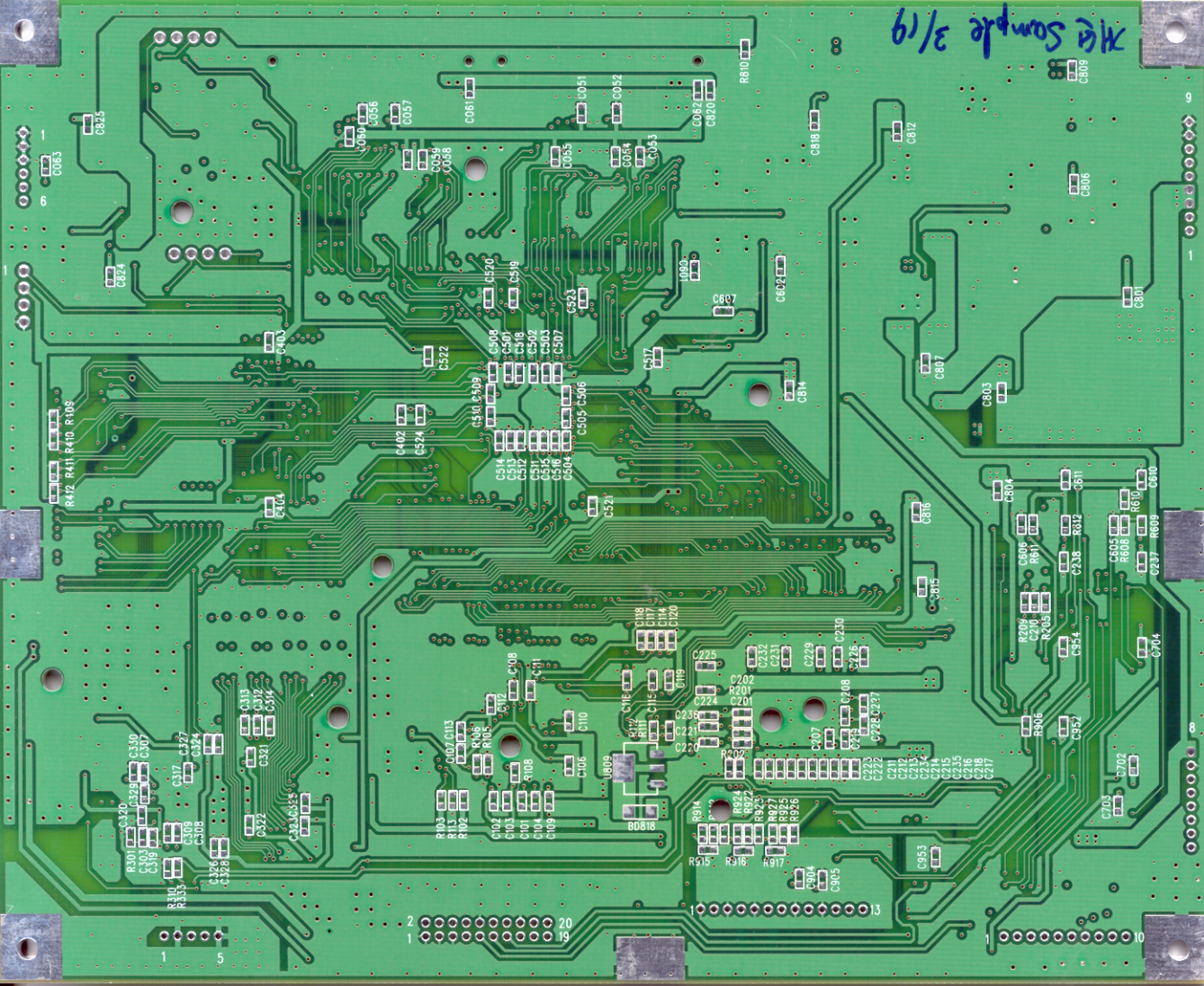
Hi Sample 3/19
BD818
U809

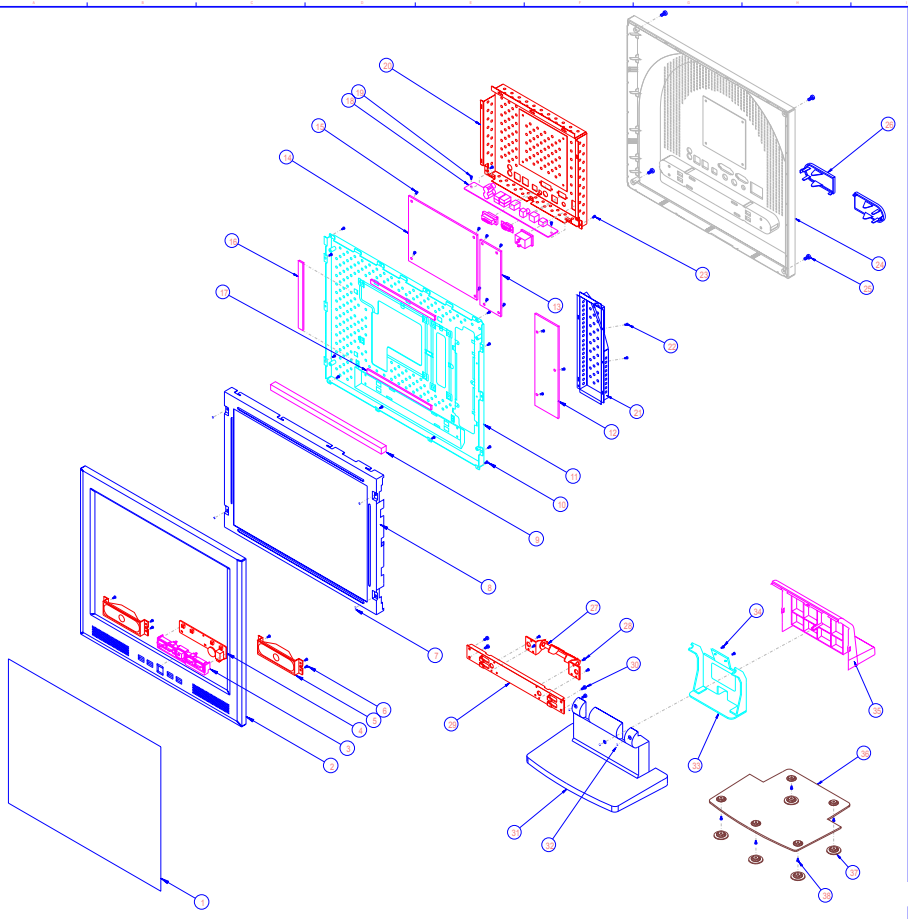

NO	PART NO	PART NAME	DESCRIPTION	QTY	REMARK
38	5004000190	SCREW	MC 3*8	5	
37	6261043200	RUBBER FOOT		5	
36	6105189700	BASE METAL	SCP-1 T=3.0	1	
35	6201290500	STAND FRONT	ABS 94-HB	1	
34	M11144010012	SCREW	M4x10	2	
33	6101210500	HINGE FRAME	SCP-1 T=2.6	1	
32	5004000190	SCREW	MC 3*8	3	
31	6201290400	STAND FRONT	ABS 94-HB	1	
30	M11144010012	SCREW	M4x10	4	
29	6110260900	HINGE BRKT	SECC T=1.0	1	
28	5004000190	SCREW	MC 3*8	4	
27	6215021500	HINGE		1	
26	6215235200	HINGE CAP	ABS 94-HB	2	
25	5004000187	SCREW	MC4x14	4	
24	6201290300	REAR COVER	ABS 94-HB	1	
23	5004000192	SCREW	MC3x6	5	
22	5004000192	SCREW	MC3x6	2	
21	6120046500	INVERTER SHIELD	SPTE T=0.5	1	
20	6120046400	FRAME SHIELD	EGF T=1.0	1	
19	5004000190	SCREW	MC3x8	2	
18		CONECTOR BOARD		1	
17	6128010118	GASKET	12x1.5x260	1	
16	6128010119	GASKET	12x0.5x260	2	
15	5004000192	SCREW	MC3x6	11	
14		MAIN BOARD		1	
13		POWER BOARD		1	
12		INVERTER BOARD		1	
11	6101217900	MODULE FRAME ASSY	EGF T=1.0	1	
10	5004000190	SCREW	MC3x8	10	
9	6128010115	GASKET	12x6x400	1	
8		18" MODULE		1	
7	M11144010012	SCREW	M4x10	4	
6	5004000190	SCREW	MC3x8	4	
5		SPEAKER L/R		1/1	
4	3010700768	OSD BOARD		1	
3	6215235100	KNOB OSD	ABS 94-HB	1	
2	6201290200	COVER FRONT	ABS 94-HB	1	
1	6242027802	SHEET PROTECT	PET T=0.1	1	

UNLESS OTHERWISE SPECIFIED DIMENSIONS ARE IN mm (INCHES) TOLERANCES ARE: LINEAR ± ANGLES ± MATL UNLESS NOTED ±	L80A	TITLE: EXPLODED VIEW	REV: A
		DWG NO.: B42100***01A	SHEET: 1/1
		A2	

HYUNDAI ELECTRONICS